WIRELESS ENGINEER

Vol. XXVI JULY 1949 No. 310

Relatively-moving Charge and Coil

WE feel that some apology is perhaps due to our readers for returning to this subject, but we were so impressed by the fact that a man of Professor Cullwick's standing was prepared,* on what we regarded as very questionable grounds, to maintain that certain phenomena could not be explained by Clerk Maxwell's electromagnetic theory, that we felt compelled to pursue the matter further.

For the sake of symmetry we consider two charges $+Q$ and $-Q$ and a metal ring as shown in Fig. 1. If the ring is at rest and the charges moving to the right, they will produce a magnetic field through the ring the magnitude of which at any point in the plane of the ring can be easily calculated. The variations of the magnetic flux will induce an e.m.f. in the ring; as before, we assume the ring to be open-circuited, that is, we shall not consider the effect of any current set up in the ring; the effect of such currents would be the same in either case. Up to this point there appears to have been no difference of opinion; it was when the charges were at rest and the coil moving that Professor Cullwick made what we considered to be wrong assumptions. He assumed that the charge $+Q$ induced negative charges on the outside of the ring at A and positive charges on the inside. If this were so they would, of course, to some extent neutralize each other's magnetic effect at any distance, since the wire is assumed to have a very small diameter. To make this point quite clear we propose to make some approximate calculations for a definite case. When in the position shown we assume the distance of $+Q$ and $-Q$ from the centre to be $2r$ where r is the radius of the ring. The electric field at P due to $+Q$ and $-Q$ will be downward and equal to $\frac{2Q}{5r^2} \times \frac{2}{\sqrt{5}}$. The distribution of charge over the ring will be such as to give zero resultant electric force everywhere on the ring. As a first approximation we neglect the small difference between the density on the outer and inner surface of the wire at any point and assume that the charge per unit length at A is q_{max}. We further assume that the charge per unit length at any point is equal to $q_{max} \sin^2\theta$; this is an arbitrary assumption and we shall also try the effect of assuming it to be $q_{max} \sin^3\theta$. These both lend themselves to simple calculation whereas any attempt to determine the actual distribution would be very involved. We shall now calculate what q_{max} must be in order that the resultant electric field at P may be reduced to zero.

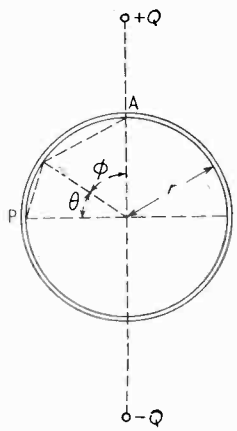

Fig. 1.

$$\text{Field at P due to } rd\theta = \frac{q_{max} \sin^2\theta . rd\theta}{(2r \sin\theta/2)^2}$$

$$\text{Field at P due to whole ring} = \frac{q_{max}}{2r} \int_0^{\pi} \frac{\sin^2\theta \cos\theta/2}{\sin^2\theta/2} d\theta$$

* On p. 246 we publish a letter received from Professor Cullwick after this Editorial was written. This letter has necessitated a number of alterations and deletions in the Editorial. Since he now agrees with our point of view, his letter and this Editorial may be regarded as complementary.

www.americanradiohistory.com

$$= \frac{q_{max}}{2r} \int_0^{\pi} \frac{4 \sin^2 \theta/2 \cos^2 \theta/2 \cos \theta/2}{\sin^2 \theta/2} d\theta$$

$$= \frac{2q_{max}}{r} \int_0^{\pi} \cos^3 \theta/2 \, d\theta$$

$$= \frac{2q_{max}}{r} \times \frac{4}{3} = 2.67 \, q_{max}/r$$

To give zero resultant field at P we must have

$$2.67 \frac{q_{max}}{r} = \frac{4}{5\sqrt{5}} \cdot \frac{Q}{r^2}$$

that is, $q_{max} = 0.135 Q/r$

As we assume that $q = q_{max} \sin^2\theta$, the mean value will be $q_{max}/2$ and the total charge on each half of the ring $q_{max}\pi r/2 = 0.21Q$.

If instead of $q = q_{max} \sin^2\theta$ we assume that $q = q_{max} \sin^3\theta$ the above integral becomes

$$\frac{2q_{max}}{r} \int_0^{\pi} \cos^3 \frac{\theta}{2} \sin\theta \, d\theta = \frac{4q_{max}}{r} \int \cos^4 \frac{\theta}{2} \sin \frac{\theta}{2} d\theta$$

$$= \frac{8q_{max}}{r} \int_0^{\pi} \cos^4 \frac{\theta}{2} d \cos \frac{\theta}{2} = \frac{8q_{max}}{5r} = 1.6 \, q_{max}/r$$

In this case, to give zero resultant field at P

$$1.6 \frac{q_{max}}{r} = \frac{4}{5\sqrt{5}} \frac{Q}{r^2}$$

and $q_{max} = 0.224 \, Q/r$.

The mean value of q will now be $0.425 \, q_{max}$ and the total charge on each half of the ring $0.3 \, Q$. The charges are greater because of the assumed greater concentration in the neighbourhood of A; i.e., further from P.

We will now calculate the magnetic field H produced at the centre of the ring by the motion of these induced charges at the moment represented by the diagram. Due to unit length of wire $H = qv \sin \theta/cr^2$ and if $q = q_{max} \sin^2\theta$, $H = q_{max}v\sin^3\theta/cr^2$. Due to the whole ring

$$H = \frac{q_{max}v}{cr^2} \times 2\pi r \times \text{average value of } \sin^3\theta$$

$$= \frac{q_{max}v \, 2\pi}{cr} \times \frac{4}{3\pi} = \frac{q_{max}v}{cr} \times \frac{8}{3}$$

Putting $q_{max} = 0.135 \, Q/r$ we obtain $H = 0.36 \, Qv/cr^2$. If, however, $q = q_{max} \sin^3\theta$, $H = q_{max}v \sin^4\theta/cr^2$ due to unit length, and for the whole ring we then have

$$H = \frac{q_{max}v \, 2\pi}{cr} \times 0.375 = 2.356 \, q_{max}v/cr$$

Putting $q_{max} = 0.224 \, Q/r$ we have $H = 0.528 \, Qv/cr^2$.

If the ring were at rest and the charges $+Q$ and $-Q$ moving with velocity v, the strength of the magnetic field at the centre of the ring would be

$$2 \frac{Qv}{c} \cdot \frac{1}{(2r)^2} = 0.5 \, Qv/cr^2.$$

which agrees within 6 per cent with the value obtained for the moving ring on the assumption that the induced charge is distributed according to the formula $q = q_{max}\sin^3\theta$. It can safely be assumed that this is a fairly close approximation to the actual distribution.

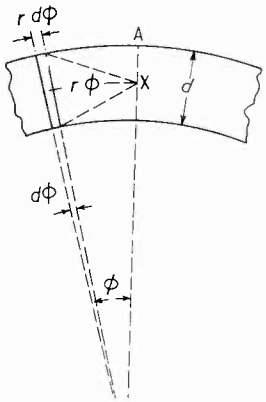

Fig. 2.

We turn now to another matter; viz, how the charge q on unit length of the wire is distributed over its surface. At A the field due to $+Q$ and $-Q$ would be in the plane of the cross-section of the wire, and practically uniform over the very small cross-section. Its value would be $Q/r^2 + Q/9r^2 = 1.11 \, Q/r^2$. The field at A due to the charges on the ring, except those in the immediate neighbourhood of A, can be calculated as follows :—

$$\mathcal{E}_r' = 2 \int_{\alpha}^{\pi} \frac{qr \, d\phi}{(2r \sin \phi/2)^2} \sin \phi/2$$

Putting $q = q_{max} \cos^3\phi$

$$\mathcal{E}_r' = \frac{q_{max}}{2r} \int_{\alpha}^{\pi} \frac{\cos^3\phi}{\sin \phi/2} d\phi$$

The values of $\cos^3\phi/\sin\phi/2$ are as follows :—

ϕ in degrees

10	15	30	45	60	90	120	150	180
10.92	6.91	2.51	0.925	0.25	0	−0.144	−0.672	−1

These are plotted in Fig. 3.

Over a small angle α on either side of A a different procedure is necessary. As a rough approximation we can say that the electric field at X in Fig. 2 due to the elemental ring $rd\phi$ will by equal to

$$\frac{qrd\phi}{(\phi r)^2 + (d/2)^2} \times \frac{\phi r}{\sqrt{(\phi r)^2 + (d/2)^2}}$$

and its radial component will be this multiplied by $\sin\phi/2$ or for small values of ϕ by $\phi/2$, which gives

www.americanradiohistory.com

$$\frac{q}{2r}\frac{\phi^2\,d\phi}{\left[\phi^2+\left(\frac{d}{2r}\right)^2\right]^{3/2}}$$

Since $\cos^3\phi$ differs little from 1 for such small values of ϕ we can put $q = q_{max}$ and the radial component of the electric field due to this part of the charge will be

$$\mathcal{E}_r'' = \frac{q_{max}}{2r}\int_0^{\alpha}\frac{2\phi^2}{\left[\phi^2+\left(\frac{d}{2r}\right)^2\right]^{3/2}}\,d\phi$$

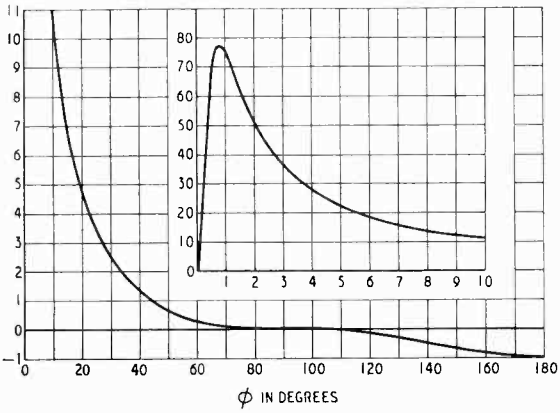

Fig. 3.

To evaluate this it is necessary to assume a definite value for d/r and we assume a ring of 5 cm radius made of wire of 1 mm diameter, so that $d/2r = 0.01$. With this value of $d/2r$ the values of $2\phi^2 \Big/ \left[\phi^2+\left(\frac{d}{2r}\right)^2\right]^{3/2}$ are as follows :

ϕ in degrees

0.1	0.25	0.5	0.81	1.0	2	3	4	5	10
5.82	29.2	65.2	77	75	50.8	36.3	27.8	22.2	10.9

These are plotted in Fig. 3.

The two curves merge into one another at about 10 degrees and the mean value between 0 and π is found to be 2.225. Hence

$$\mathcal{E}_r = \frac{q_{max}\pi}{2r} \times 2.225 \text{ or, putting } q_{max} = 0.224\frac{Q}{r}$$

$$\mathcal{E}_r = 0.785Q/r^2$$

Adding this to the $\mathcal{E}_r$ due to $+Q$ and $-Q$ we have

$$\mathcal{E}_r = (0.785 + 1.11)\,Q/r^2 = 1.9Q/r^2$$

To neutralize this radial field the density of the induced charge must be greater on the outer surface of the ring than on the inner surface, or, what amounts to the same thing, charges with opposite signs as shown in Fig. 4 must be superposed upon the uniform charge. If Fig. 4 represent a section of the ring at A these superposed charges must produce an upward field $\mathcal{E}_s$ equal and opposite to $\mathcal{E}_r$. If $-q'$ be the charge on the upper half of the wire and $+q'$ that on the lower half per unit length then $\mathcal{E}_s = 4\pi q'/d$. The charges will be so distributed that the field is approximately uniform as shown.

Equating $\mathcal{E}_s$ and $\mathcal{E}_r$ we have $q' = \frac{1.9}{4\pi}Q\frac{d}{r^2} = 0.15\,Q\frac{d}{r^2}$.

If the density of the charge q_{max} at A, assumed uniform, is σ_0, and the maximum density of the charges $+q'$ and $-q'$ is σ' then

$$\sigma_0 = q_{max}/\pi d = \frac{0.224}{\pi d r}\cdot Q$$

$$\text{and } \sigma' = q'/d = \frac{0.15}{r^2}Q$$

$$\therefore\ \sigma'/\sigma_0 = 4.2\,d/2r.$$

In the example considered we assumed $r = 5$ cm and $d = 1$ mm and for these values $\frac{\sigma'}{\sigma_0} = \frac{4.2}{100}$.

This means that the negative induced charge at A has a maximum density on the outside of the ring 4.2 per cent above the average density, and a minimum density on the inside of the ring 4.2 per cent below the average density, this difference sufficing to neutralize the electric field in the metal of the ring due to the charges $+Q$ and $-Q$ and to the charges on the ring itself.

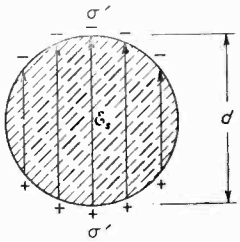

Fig. 4.

Although we have made several approximations they are of a minor character and cannot materially affect the result. We have disproved the assumption that the induced charges on the outer and inner surfaces of the ring are of opposite sign and have shown that in the calculation of the magnetic field one may safely assume that the surface density is the same inside and outside. We have also shown that a reasonable assumption as to the distribution of the charge gives the same magnetic field at the centre of the ring as when the ring was at rest and the charges moving. In both cases this magnetic flux increases from zero to a maximum and decreases to zero in the

www.americanradiohistory.com

same time, and we found it difficult to believe that in one case the application of classical electromagnetic theory would give an induced e.m.f. whilst in the other case it would not. It would be interesting to know on what this strange conclusion was based. The case of the moving coil and stationary charge is admittedly more complex than the case of the stationary coil since in the latter case there is no question of e.m.fs induced in moving conductors and one is only concerned with the variation of magnetic flux through a stationary ring. If one admits, however, that the maximum magnetic flux is the same and that it is reduced to zero in the same time, the flux reduction due to weakening of the field added to the flux reduction due to movement of the conductor in the field. must surely give the same total flux reduction and the same induced e.m.f.

One can picture the change being made in a number of steps, first keeping the field constant and slightly moving the conductor, then keeping the conductor at rest and changing the field to a new value, and so on. Each change would cause a small reduction of the flux through the ring and a consequent induced e.m.f. The time integral of these induced e.m.fs must surely correspond to the total change of flux. If not, it would be interesting to know just where and why the classical electromagnetic theory of Clerk-Maxwell fails to explain the phenomenon.

If at a given moment a jug was full of water and at a later moment it was empty, and it was known that some had been ladled out and some spilt over the edge, it is hard to imagine anyone maintaining that, on calculating the two sources of loss, he found that they cancelled each other. In his letter on p. 140 of our April issue Professor Cullwick said 'he must therefore, if he uses Maxwell's theory, calculate *two* components: one due to the rate of change of flux through a stationary path momentarily coincident with the moving loop, and one due to the motion of the loop *through* this field. These two components are found to cancel, giving zero e.m.f.'

We are relieved to know that Professor Cullwick no longer supports this statement.

G. W. O. H.

ACCURATE FREQUENCY MEASUREMENT

Proposed Method for Use up to 12,000 Mc/s

By W. F. Brown, B.Sc. (Eng.Lond.)

(Radio Department, Royal Aircraft Establishment)

Introduction

THE following brief description will help readers not familiar with frequency-measuring technique to understand the principles on which the proposed system is based.

In place of attempting to measure a high unknown frequency directly, its difference from a known harmonic of a variable reference oscillator is determined. The important features which contribute to the accuracy of the system are that the reference-oscillator frequency is always standardized in terms of a highly accurate and stable low-frequency quartz-crystal calibration oscillator and remains fixed during the period of measurement, and that the difference between the unknown frequency and the harmonic of the reference oscillator is always relatively small; therefore the difference is measured easily, and if inaccuracies do occur in the process, the percentage effect on the final accuracy is small.

The proposed system provides automatically a method of determining the orders of the harmonics used and errors due to ambiguities are avoided.

All the problems related to the accurate measurement of high radio frequencies (e.g., of the order of one to twenty kMc/s) have not yet been solved. The techniques which have been used successfully at lower radio frequencies (e.g., from 20 kc/s up to several hundred Mc/s) have been adapted for application higher up the frequency spectrum, and in the process have developed but little. Thus, in place of the quartz crystals of the medium frequencies (a few kc/s up to 20 or 30 Mc/s) with tolerances of perhaps 1 or 2 parts in a million in good cases, we have, particularly at frequencies above about 500 Mc/s, high-Q resonators of various types which, in order to be capable of maintaining the same high order of accuracy, are necessarily of fixed frequency also. In addition, extrapolation

MS accepted by the Editor, April 1948

www.americanradiohistory.com

is not readily carried out and it is not easy to relate measurements by this method to accepted low-frequency standards. Clearly, the fixed frequency high-Q resonator does not provide a very convenient means of measurement over a range of frequencies.

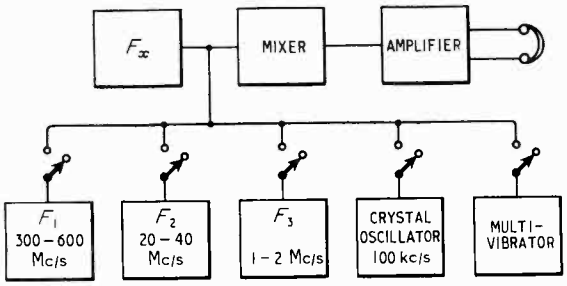

Fig. 1. *Principle of usual heterodyne method of measuring high frequencies.*

Heterodyne methods are preferable because comparison with accepted low-frequency standards may be carried out more easily, discrimination is usually better, and a higher order of sensitivity is possible, together with a wide measurable range of frequencies. As generally used, however, the overriding difficulty associated with heterodyne methods is that of avoiding ambiguities. In many low-frequency standard equipments, the possibility of selecting incorrect harmonics is serious enough; but when in addition one or two transfer oscillators are included, high-order harmonics of which are to be used, gross errors of measurement are possible; these errors can be avoided only by the exercise of considerable care.

The method described herein has been developed primarily with a view to eliminating these troublesome ambiguities; it is essentially a high-frequency method; it readily provides an accuracy of better than 1 in 100,000 at frequencies higher than 1 kMc/s; it may be checked easily against any suitable low-frequency standard source, and it employs a medium- or low-frequency quartz crystal for calibration purposes.

In the most commonly used heterodyne method, illustrated in Fig. 1, a high-order harmonic of a free-running variable oscillator having a fundamental frequency F_1 of several hundred Mc/s is tuned to zero beat (or the centre of the heterodyne 'spread') with the unknown F_x; a harmonic of a second oscillator of lower frequency F_2 is then made to beat with tuned oscillator F_1. Similarly, the frequency of oscillator F_2 is determined in terms of that of another oscillator of lower frequency still, F_3. In this way the frequency of the unknown is related in stages to an accurately known low-frequency source; e.g., a quartz crystal of frequency probably as low as 100 kc/s. A multivibrator system is frequently incorporated to assist in the process of interpolation by the provision of a series of calibration or check points more closely spaced (i.e., having a lower-frequency difference than the points provided by the crystal). The multivibrator is usually brought into operation in conjunction with the variable oscillator at low frequency F_3. The multivibrator is locked with the crystal oscillator and its frequency is therefore always a sub-multiple of that of the latter. The system may be arranged to provide a series of calibration points on the dial of F_3 at intervals, for example, of 1 kc/s. Over such small changes of frequency the scale of F_3 can be considered linear and the accuracy of interpolation is high. In addition to the problem of identifying the orders of the harmonics in use, numerous unwanted heterodyne beats are liable to be produced. The system is capable of very high accuracies, provided these sources of error do not find their way into the final answer, and is most suited to the needs of the experienced operator.

Multiples only of the frequencies of the several oscillators are employed, and choice of the correct multiples may not be an easy matter, since with the high orders used, amplitudes are very nearly equal and frequency-spacing is small. The initial effect on even an experienced operator can be rather devastating, as on rotation of the controls, his ear is assailed by an apparently unlimited number of heterodyne beats with seemingly nothing to choose between them.

In the system now proposed, the *frequency difference* between the unknown source and a *known crystal-checked harmonic* of a relatively low-frequency stable tuned reference oscillator is measured. (Note: a crystal-checked oscillator is one which is arranged so that heterodyne beats between harmonics of itself and those of a crystal-controlled oscillator may be observed, and the frequency of the former determined thereby in terms of that of the latter. A crystal-checked harmonic of an oscillator is a harmonic the frequency of which corresponds exactly to that of a known harmonic of a crystal-controlled oscillator.)

In order to check the calibration of a variable frequency oscillator against a highly-stable calibration crystal oscillator, the outputs of the two oscillators are fed into a suitable mixer, the resultant difference-frequency output from which is then amplified and passed into telephones, magic-eye or other indicator. The frequency range over which telephones and human ears are

www.americanradiohistory.com

sensitive is relatively very limited and is of the order of 3×10^{-5} that of the variable oscillator in the present case, or put another way, assuming that a total angle of rotation of 80 degrees (as for a balanced butterfly tuning unit) is required to cover the range 300 to 600 Mc/s, then a movement of only 0.005 degree will be sufficient to tune the variable oscillator into and out of audibility with the harmonic of the crystal oscillator. The use of an indicator having a much wider frequency response makes searching very much easier, and enables measurements to be made when the drift of the unknown exceeds the range of audibility, while a reduction gear, preferably of the positive worm and spring-loaded split-wheel variety facilitates final adjustment.

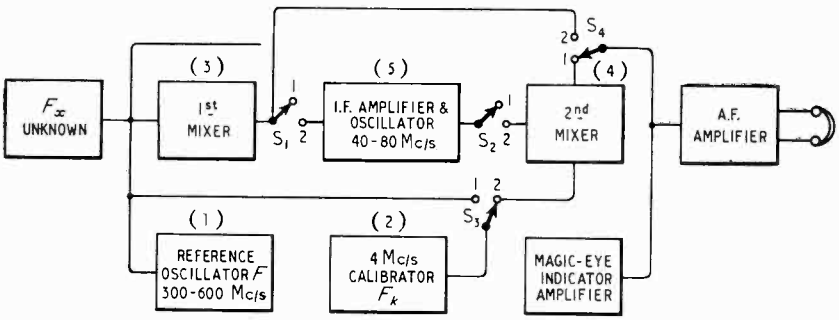

Fig. 2. *To check reference-oscillator frequency:—S_1 in position 1; S_2 in position 2; S_3 in position 1; S_4 in position 2. To check i.f. oscillator frequency:—S_1 in position 1; S_2 in position 2; S_3 in position 2; S_4 in position 1. To obtain major calibration points on F scale:—S_1 in position 1; S_2 in position 1; S_3 in position 2; S_4 in position 2. To obtain channel beats via i.f. unit:—S_1 in position 2; S_2 in position 2; S_3 open; S_4 in position 1. To obtain direct beats between unknown source F_x and reference oscillator:—S_1 in position 1; S_2 in position 2; S_3 open; S_4 in position 2. For normal measurement:—S_1 in position 2; S_2 in position 2; S_3 open; S_4 in position 1.*

The actual process of checking the frequency of a variable oscillator against a harmonic of a calibration oscillator consists in adjusting the former frequency until the difference between this frequency and that of the harmonic of the calibration oscillator to be used comes within the range of response of the magic-eye indicator. The adjustment of the variable oscillator is continued until the difference frequency as observed by means of both telephones and magic-eye indicator becomes zero; i.e., until the zero-beat condition is reached. The frequency of the variable-frequency oscillator and that of the harmonic of the calibration oscillator are thus made equal.

In the present application this process is modified slightly when corrections for drift of the variable oscillator are being made. In this case the dial of the variable oscillator is set exactly to the position, as obtained from the calibration of the dial, corresponding to a given check frequency and a low capacitance associated with the variable oscillator is adjusted to give the required zero-beat condition. By this means the calibration of the variable oscillator is corrected in the zone around the relevant check frequency.

The variable reference oscillator need not be calibrated very accurately since in normal use it is always set to zero beat with a harmonic of the quartz-crystal calibration oscillator.

A simple means of determining the harmonic order of the tuned oscillator is included in the system, thereby almost eliminating the possibility of ambiguities occurring.

Since the difference between the frequency of the source to be measured and the frequency of the harmonic of the reference oscillator is usually only a small fraction of the former, and since the reference oscillator is always set to zero beat with a harmonic of a quartz-crystal calibration oscillator, a high order of accuracy is obtainable. This accuracy increases with the order of the reference-oscillator harmonic in use.

It will be seen that the measurement of the frequency of the source is carried out in two stages: first, by setting the reference oscillator to zero beat with a harmonic of the calibration crystal oscillator, thereby making the accuracy of this part of the measurement equal to that of the crystal; and secondly, by measuring, by means of the i.f. amplifier-oscillator section of the equipment, the difference between the frequency of the unknown source and that of a known harmonic of the reference oscillator. The smaller the ratio of this difference frequency to the frequency of the source, the smaller will be the percentage effect of errors in the measurement of the difference frequency on the overall accuracy of measurement of the unknown frequency.

In Fig. 2 is shown a block schematic diagram of the equipment, and brief descriptions of the individual items will now be given.

Variable Reference Oscillator

1. The variable reference oscillator, Fig. 3 (a), covers a fundamental range of 300 to 600 Mc/s. The frequency law is selected so that the dial

www.americanradiohistory.com

calibration is as linear as is conveniently possible. The accuracy of this calibration need only be sufficiently high to enable the oscillator harmonics to be identified. This would become difficult if the ratio of frequency change to angle of rotation were excessively high. For this reason the frequency coverage of the reference-oscillator tuned circuit should be restricted to little more than the required range of 300 to 600 Mc/s; a small excess is necessary to provide for the effects of aging and temperature changes. In addition, to enable identification to be carried out safely, instability from all causes, after the warming up period, must not exceed approximately 1.5 Mc/s, assuming a 4.0-Mc/s calibrator (i.e., a crystal or a frequency multiplier having an output of 4.0 Mc/s is used), unless means for correcting drift are incorporated in the reference oscillator. This may be a sharply-tuned resonant circuit to identify one 'spot' frequency, and a frequency corrector (e.g., a variable capacitor of low value), associated with the main oscillatory circuit.

The neatest method of checking and correcting the calibration of the reference oscillator is the following: the switching of the equipment is arranged so that the i.f. oscillator output may be injected into the first or second mixer as required; in the latter case the i.f. oscillator output is mixed with that of the calibration crystal oscillator or multiplier, in both cases the final calibration frequency being 4.0 Mc/s. The dial of the i.f. oscillator-amplifier is set exactly, for example, to 40.0 Mc/s and the frequency corrector incorporated in the i.f. oscillator circuit is adjusted to zero beat with the calibration source. Since the frequency ratio is relatively low, and the spacing between major heterodyne beats large, there is no possible ambiguity. The i.f. oscillator output (left fixed at 40 Mc/s) is next mixed with that of the reference oscillator in the first mixer, the output of which is taken to the a.f. amplifier. Major beats will be observed at 40 Mc/s intervals; i.e., at 320, 360, 400 . . . 600 Mc/s. Again the frequency ratios are low i.e., 320/40, 360/40, 400/40, etc.) and ambiguity is not possible. The reference oscillator dial is set, for example, to the 320-Mc/s position and the frequency-corrector capacitor adjusted until zero beat is obtained at the correct calibrated position of the main tuning dial. The dial readings in the zone around 320 Mc/s must now be correct and identification of the 4-Mc/s check points will be carried out readily. The same procedure may be employed at the other major check frequencies, 360, 400, 440, etc., Mc/s, as required.

A butterfly-type tuned circuit is recommended for use in the reference oscillator. Butterfly circuits have a wide available tuning range; frequency ratios as high as 5/1 are obtainable, while the present requirement of 2/1 is readily attained with a relatively high minimum circuit capacitance. Butterfly circuits have high Q and approximately constant shunt impedance which provide good stability together with nearly constant amplitude of oscillation over the range. In addition they are very compact and capable of rigid construction.

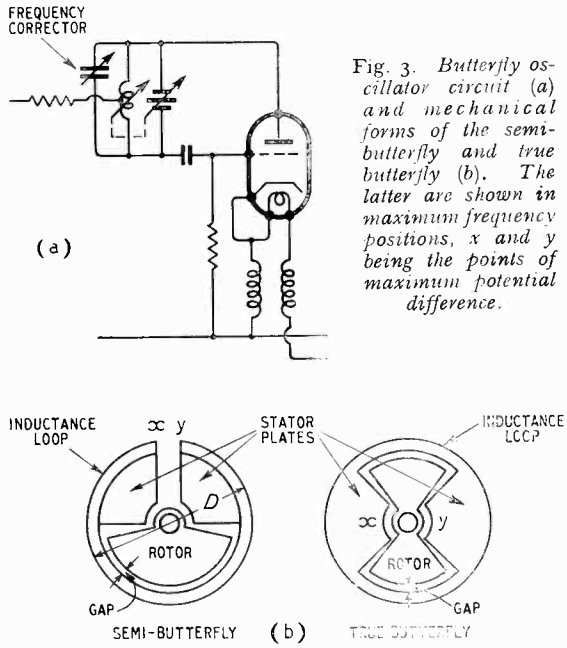

Fig. 3. *Butterfly oscillator circuit (a) and mechanical forms of the semi-butterfly and true butterfly (b). The latter are shown in maximum frequency positions, x and y being the points of maximum potential difference.*

These desirable features are achieved by combining variation of inductance with variation of capacitance in a single assembly which incorporates both elements. In Fig. 3(b) is shown the principle of the semi-butterfly and true butterfly circuit; in each case movement of the rotor plates (corresponding to the rotor of a normal variable capacitor) relative to the stator plates produces a change of effective shunt capacitance, while movement of the rotor relative to the loop inductance produces a change of effective inductance due to partial cancellation of the loop-inductance flux by the flux due to the eddy currents induced in the edges of the rotor plates. Thus when the rotor plates are in the 'open' position, as shown, capacitance is a minimum, flux cancellation is a maximum and the effective inductance is a minimum.

The stator assembly may be formed by the stacking and bolting together of a number of flat plates and spacer rings (which constitute part of the inductance ring) alternately. The rotor plates

www.americanradiohistory.com

mesh into the spaces corresponding to the spacer rings. An important precaution against absorption spots, which in bad cases can be sufficient to prevent oscillation, consists in thoroughly bending the sectional stator plates together by means of soft solder around the periphery.

The semi-butterfly circuit is the more convenient for connection to most modern types of high-frequency oscillator valve (nearly all of which are designed for insertion into concentric circuits) at points x and y, but is more productive of unwanted responses and liable to produce less constant amplitude of oscillation over the range due to the fact that the circuit is balanced only when the rotor is either fully in or fully out of mesh with the stator. As the circuit goes out of balance, losses increase and the amplitude of oscillation decreases.

For a given number of plates, maximum inductance and capacitance are both approximately proportional to D^2; the minimum frequency is therefore proportional to $1/D^2$. The maximum frequency is approximately proportional to $1/D$.

The true butterfly circuit is preferable because it is balanced for all positions of the rotor, and for this reason is more commonly used, but there is the mechanical disadvantage that connection of anode and grid (the latter via a small capacitor) of most high-frequency oscillator valves cannot be made conveniently to points x and y, which are the points of maximum potential difference.

An inductance ratio of 2/1 is readily obtained; allowing for a small margin at each end of the scale, a capacitance ratio not greatly exceeding 2/1 is sufficient to provide the 2/1 frequency ratio required. This low capacitance ratio can be utilized in the quest for overall stability of the oscillator.

Q is not constant over the range, but average values of the order of 500 are obtainable. Since series resistance is a linear function of frequency, Q reaches its minimum value at the h.f. end of the range. The shunt impedance of the circuit may be of the order of 7000 ohms, constant to within perhaps 10% over the range.

These characteristics combine to make the butterfly circuit very suitable for the present type of application, and no great difficulty in designing an oscillator to meet the general requirements is to be expected. A problem which can be troublesome is the production of electrical noise in the bearings of the tuning unit. This noise can be quite sufficient to mask weak heterodyne beats, during rotation of the butterfly spindle. Metal to metal bearings (including single and multi-ball bearings) are intolerable in this respect, metal running on a suitable insulating material is an improvement, but the use of suitable insulating materials for all bearing surfaces holds promise of a possible complete solution. Polytetrafluoroethylene, with its self-lubricating and other valuable properties deserves consideration in this field.

For design purposes, the inductance of the butterfly circuit loop may be obtained from the expression*

$$L = 1.35 \times \frac{1}{8} \times 4\pi r \left(\log_e \frac{36r}{t + w} - 2 \right) 10^{-3}\ \mu\text{H},$$

where r is the inside radius of the inductance loop, and t and w are the thickness and width of the loop, all in cm. The maximum inductance in the closed position is approximately one eighth the inductance of the full ring, and the factor 1.35 allows for the contribution of rotor and stator plates.

The calculation of capacitance is carried out in the usual way; the effective capacitance is that of the two halves in series.

4-Mc/s Calibrator

A 4-Mc/s calibrator consisting of a 4-Mc/s quartz-crystal-controlled oscillator is used, or a crystal-controlled oscillator of lower frequency; e.g., 100 kc/s, together with a 40/1 frequency multiplier. Much work has been done on the design of precision low-frequency crystals by British manufacturers and the General Post Office. High-frequency crystals with low temperature coefficients are not so highly developed and so, at the present time, the use of a low-frequency crystal mounted in a temperature-controlled oven together with a frequency multiplier is to be preferred if the highest possible accuracy is required. For example, 100-kc/s DT cut plates mounted in evacuated glass envelopes having a *mean* frequency/temperature coefficient of $\pm 1.0 \times 10^{-6}$ per degree C over a temperature range of $\pm 50°$ C are in production, and around the mean operating temperature of the oven, which is arranged to correspond to the 'turn-over' point of the crystal characteristic (the law of frequency change/temperature is parabolic in shape), the frequency/temperature coefficient may be of the order of 0.5×10^{-7} per degree C, over a temperature range of $\pm 1.0°$ C. Bearing in mind that the oven temperature may be held constant by means of temperature-sensitive bridges and amplifiers to within ± 1 degree C in moderate, and ± 0.1 degree C in good, cases for quite large changes of ambient temperature, it will be seen that the variation of frequency of the crystal due to ambient temperature changes may be reduced to

* General Radio Bulletin, October and November 1944.

www.americanradiohistory.com

as little as $\pm 0.5 \times 10^{-8}$; i.e., $\pm 0.5 \times 10^{3}$ c/s at the fundamental, and $\pm 2 \times 10^{2}$ c/s at 4.0 Mc/s.† Naturally this takes no account of other factors which can influence the frequency of the crystal oscillator, many of which can be summed up under the heading of 'aging'—both of the crystal and of associated components in the maintaining system, which are also usually housed in the oven. In order to provide maximum immunity from the effects of variation in the maintaining system either anti-resonant circuits having high input capacitance (i.e., the capacitance appearing across the crystal) or resonant circuits should be used. Anti-resonant circuits have the advantage that considerable adjustments of frequency can be carried out easily, but in practice their stability is inferior to that obtainable from resonant condition oscillators.

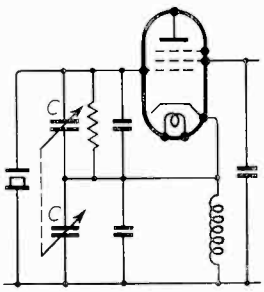

Fig. 4. *Cathode-injection anti-resonant crystal-oscillator having good stability with considerable range of frequency adjustment.*

In general, for maximum stability, the crystal drive level should be as low as associated conditions permit. Internal heating of the crystal plate is minimized thereby, as also is the possibility of fracture.

In Fig. 4 is shown an anti-resonant cathode-injection crystal-oscillator circuit having good stability together with a considerable range of frequency adjustment. The adjustable shunt capacitance appearing across the crystal all forms part of the feedback system, and is therefore not merely loss-producing. The range of frequency adjustment possible together with the fulfilment of maintenance requirements is relatively large and changes of effective shunt capacitance are not accompanied by correspondingly large changes of oscillator output level. In the circuit shown in Fig. 5 the maximum adjustment of frequency is possible; i.e., from almost the exact anti-resonant frequency to a lower critical frequency beyond which uncontrolled oscillation occurs. This is effected by the adjustable positive series reactance formed by the shunt LC circuit connected in series with the crystal. With C at its minimum value, the series reactance is a minimum and the resonant frequency of L together with all associated capacitance is much higher than the anti-resonant frequency of the crystal. L and C are chosen so that as C is increased, the resonant frequency of the series circuit falls towards the crystal frequency; i.e., the effective positive series reactance increases. It may be shown that for maintenance conditions to be supported, increase of positive series reactance must be accompanied by a decrease of the frequency controlled by the crystal. When the inductance L together with all associated capacitances resonate at a frequency just equal to that of the crystal, the crystal loses control and behaves as a capacitance only. As would be expected, therefore, overall stability decreases as the series reactance, and consequently the displacement of frequency from normal, are increased.

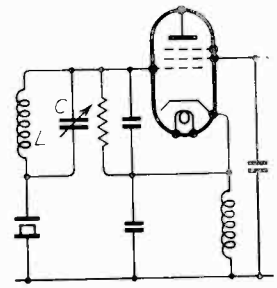

Fig. 5. *Cathode-injection anti-resonant crystal oscillator with adjustable positive reactance in series with crystal, to provide the maximum range of frequency control.*

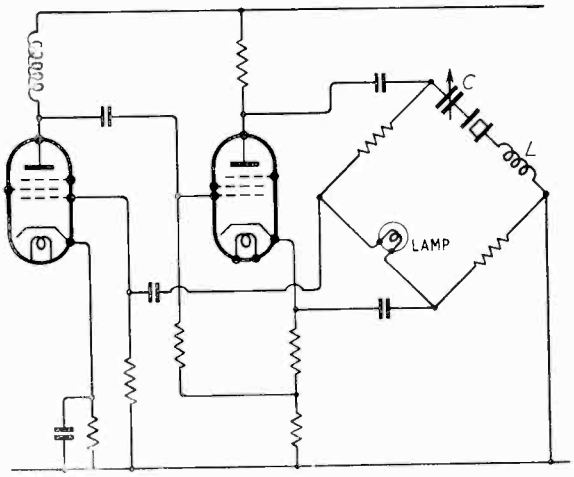

Fig. 6. *Series-resonance bridge-type oscillator.*

A circuit which enables the full stability possibilities of a low-frequency crystal to be realized is shown in Fig. 6.

Capacitor C in series with the crystal in one arm of the bridge, in conjunction with the inductance L, provides a second-order frequency adjustment, the crystal operating in the resonance condition. The resistance of the lamp included

† It should be noted that these figures apply only when the mean working temperature of the oven coincides with the 'turn-over' temperature of the crystal. In practice so far, it has proved difficult during the design of DT plates to forecast to within better than approximately 15 degrees C what this 'turn-over' temperature will be. Therefore, unless it is possible subsequently to set the mean working temperature of the oven to suit a particular plate, it may be preferable, although more costly, to employ a GT cut crystal.

www.americanradiohistory.com

in the opposite arm varies in the event of any tendency for the level to change (due to variations in supply volts, aging of the crystal, valves, etc.), in such a way that the bridge is maintained just off balance and a very nearly constant voltage is supplied to the grid of the amplifier valve for maintenance purposes over a relatively wide range of conditions. Constancy of drive level results in constancy of power dissipation within the crystal, thus changes of frequency from this cause are eliminated.

The above circuits are valuable because they do enable the adjustment of crystal-oscillator frequency to be carried out, even when this differs appreciably from the nominal frequency of the plate or bar. The use of less accurately finished, and therefore less expensive, crystals is also made possible.

The final accuracy of measurement is a function of the crystal-oscillator frequency, which with the aid of thermal control and frequency adjustment in the maintaining system may be held to one or two parts in a million (i.e., between 4 and 8 c/s at 4.0 Mc/s) without very great difficulty.

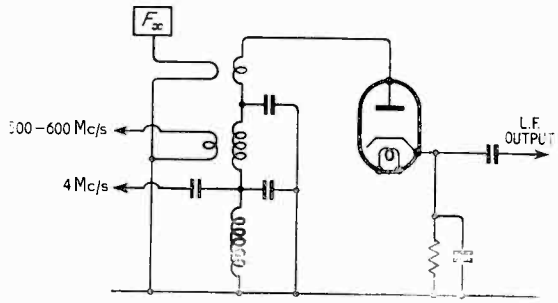

Fig. 7. *Circuit for mixer.*

Thermal control may be carried out in a variety of ways, depending on the characteristics of the crystal, the amount of frequency deviation permissible from this cause, the range of ambient temperature to be contended with and so on. In the simplest form the oven may consist of a box made of a poor thermal-conductive material, containing a 'concentrated' heater element, single thermostat unit and the crystal, with or without associated circuit elements. Internal temperature cycles may extend to perhaps ± 10 degrees C. Improvements on this include silvering and polishing the walls to reduce thermal loss, and the substitution of a distributed heater element of very low thermal inertia in place of the 'concentrated' element. By these means internal temperature cycles may be reduced to perhaps 1 or 2 degrees C. Another method with possibilities employs an evacuated envelope together with contact heating of the crystal. An advantage of this method is the lower heater power necessary for a given temperature stabilization. More ambitious systems, which employ 2-stage chambers, are available when the highest order of stability is required. In these the temperature of an outer chamber is maintained constant to coarse limits (e.g., ± 5 degrees C), by means of a simple thermostat and heater arrangement, while the temperature of an inner chamber, containing the crystal (and probably circuit elements), is held to close limits (e.g., ± 0.1 to ± 0.5 degree C) by means of a temperature-sensitive bridge and high-gain amplifier.

An isolating stage (if a frequency-multiplier is not incorporated) following the crystal oscillator is desirable, so as to avoid the possibility of frequency reaction due to changes of load, and to ensure adequate high-order harmonic generation by providing sufficient output power.

Mixer No. 1

A diode or crystal rectifier mounted in a cavity is suggested for the first mixer. Experience has shown that the former frequently provides a better signal/noise ratio. A relatively high impedance at 4 Mc/s should be included in the circuit, which is shown in Fig. 7, in order to encourage the generation of high-order harmonics.

Mixer No. 2

The second mixer may take any orthodox form; a triode-hexode mixer valve is suitable; the output from the amplifier-oscillator unit is applied to the signal grid and that of the calibration crystal oscillator (or multiplier) is taken to the oscillator section, which is used, in this case as an amplifier.

I.F. Amplifier

A 40- to 80-Mc/s intermediate-frequency amplifier and oscillator unit is used. A two-stage amplifier together with ganged oscillator is shown in Fig. 8. A cathode-injection oscillator is used, which has the advantage that one side of the tuned circuit is earthed and the output circuit is largely isolated from the oscillator circuit. Tracking of the oscillator circuit with the amplifier tuned circuits is carried out in the usual way by means of a combination of series and parallel pre-set capacitors. A corrector variable capacitor is connected across the oscillator tuned circuit, and enables the law of the main variable capacitor, and therefore its calibration, to be corrected in the zone of a selected check point, as described elsewhere.

The sensitivity of the a.f. amplifier should be high, and the noise level, including microphony, must be kept to a minimum.

www.americanradiohistory.com

The magic-eye indicator, together with its associated wideband amplifier facilitates adjustment, and when setting to zero beat, supplements the telephones, which become inoperative as this condition is approached. The wideband amplifier is necessary in order to be able to take full advantage of the magic-eye indicator. The amplifier is fed from either the first or second mixer, and the operator can watch the indicator and listen simultaneously for heterodyne beats. The first warning of approaching frequency coincidence is movement of the indicator beams; continued adjustment in the same direction will produce an audible note, and final adjustment to zero beat is also carried out with the aid of the magic-eye indicator, for at very low frequencies the telephones are insensitive. This is illustrated in Fig. 9.

A well-stabilized power supply should be employed, primarily in order to obtain maximum frequency stability from the variable reference oscillator, and all possible steps should be taken to prevent undesirable modulation of this oscillator, otherwise beat notes will be 'dirty.'

Frequencies other than those quoted may be used for the i.f. amplifier-oscillator and the variable reference oscillator; the basis on which selection is made is given later.

Referring to Fig. 2, the source of unknown frequency and a harmonic of the reference oscillator are mixed in the first mixer, the output of which is passed directly, or via the i.f. amplifier and oscillator unit and second mixer, to the audio and magic-eye amplifiers. The output from the calibrator (i.e., the crystal oscillator or frequency multiplier) may be injected into either the first or second mixer when it is desired to check the frequencies of the reference and i.f. oscillators respectively.

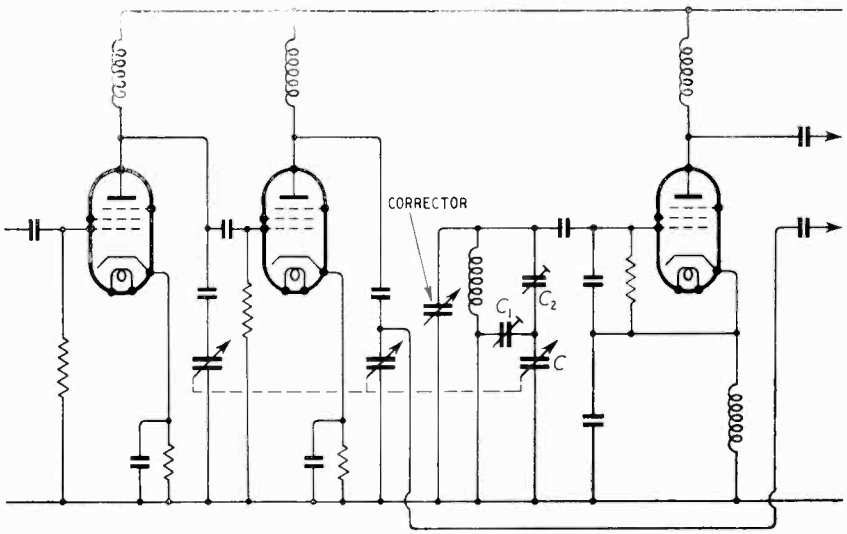

Fig. 8. *40 to 80-Mc/s amplifier oscillator unit. C_1 and C_2 are the tracking capacitors. The values are arranged to assist in producing linearity of calibration of the scale of main tuning capacitor C.*

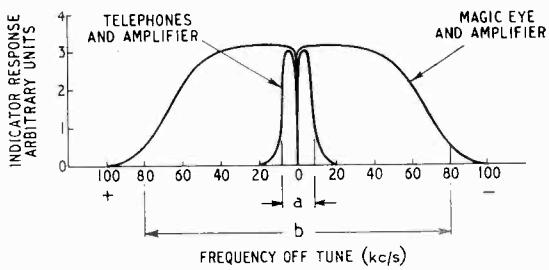

Fig. 9. *This diagram illustrates the procedure for tuning to zero beat. The magic-eye indicator is used over band b of about 150 kc/s and the telephones over band a of some 15 kc/s.*

For given values of F_x and n, with the i.f. unit out of circuit, a heterodyne beat occurs between the nth harmonic of the reference oscillator and the unknown source when the former is tuned to frequency F, such that F_x nearly equals nF. The frequency of the beat is equal to the difference between F and nF. With the i.f. unit in circuit, under similar conditions heterodyne beats will occur above and below the frequency F when the reference oscillator frequency is made $F + f/n$ and $F - f/n$, corresponding to the two

F_x = unknown frequency to be measured
F = frequency of the variable reference oscillator
f = intermediate frequency
F_k = final fundamental calibration frequency; i.e., that of the output of the frequency multiplier, if used in conjunction with a low-frequency crystal, or the frequency of the medium-frequency crystal, if the latter is used without a multiplier
F_h = harmonic calibration frequency; i.e., lying within the fundamental frequency range of the reference oscillator
All in Mc/s.
n = harmonic order of the reference-oscillator frequency used for a given measurement.

www.americanradiohistory.com

channels nF_1 and nF_2. Clearly, $(nF_1 - nF) = (nF - nF_2) = f$, where F_1 and F_2 are the *fundamental* channel frequencies of the reference oscillator.

Hence $n(F_1 - F_2) = 2f$, and $n = 2f/F_1 - F_2)$.

In other words, when the i.f. unit is in circuit, the equivalent of a superheterodyne receiver is formed, in which a frequency F_x is receivable under two conditions, viz., when the variable reference oscillator (of which a harmonic of order usually higher than unity is used) is tuned so that a particular harmonic is either above or below the signal frequency F_x to be received, by an amount equal to the intermediate frequency. The two channels referred to above correspond to these two conditions, and in receiver practice one of these channels is suppressed by pre-mixer discrimination. In the present application no discrimination is provided since both channels are used for measurement and harmonic-order determination. The effect of the i.f. oscillator is to produce a low-frequency heterodyne beat whenever two voltages are applied to the first mixer, such that the difference between their frequencies approximates to the frequency to which the i.f. unit is tuned. This heterodyne beat is a necessary link in the measurement chain.

In Fig. 10 is shown the disposition of calibration check points, channel frequencies and direct beat frequency on the dial of the reference oscillator; this provides a simple method of determining n, which is carried out as follows:—

(1) A direct heterodyne beat is obtained between the unknown frequency F_x and a harmonic nF of the reference oscillator, the i.f. unit being out of circuit, and the approximate reading on the reference oscillator dial, corresponding to the fundamental frequency F, noted.

(2) When the i.f. unit is brought into circuit, the direct heterodyne between the unknown frequency F_x and the harmonic nF of the reference oscillator disappears. If the frequency of the reference oscillator is now increased or decreased by an amount such that the difference between F_x and the selected harmonic nF of the reference oscillator is equal to f, the intermediate frequency, then a voltage of frequency f will appear at the input of the second mixer; this voltage is mixed with the output from the i.f. oscillator in the second mixer, thereby producing a low-frequency beat which is used as the means of determining frequency equality.

Thus when the dial of the reference oscillator is adjusted on each side of the setting for F, the two channel beats of frequency nF_1 and nF_2 respectively, equally displaced in frequency from F and corresponding to the fundamental frequencies F_1 and F_2 are obtained. The approximate readings for F_1 and F_2 are noted, and also the intermediate frequency f. Then

$$n = \frac{2f}{F_1 - F_2}$$

If the frequency measurement is being made near one end of the reference oscillator scale, so that only one channel beat is obtainable, then the difference between F and either F_1 or F_2 may be used, and

$$n = \frac{f}{F - F_2} \text{ or } \frac{f}{F_1 - F}$$

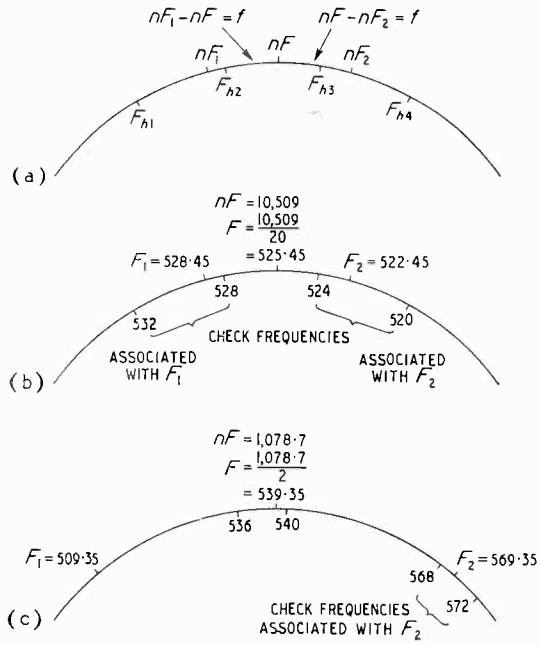

Fig. 10. *Dial of reference oscillator; F_{h1} and F_{h2} are calibration check frequencies associated with channel F_1, while F_{h3} and F_{h4} are associated with channel F_2.*

In order to provide accurate measurement of a high frequency, it is required that with the calibrator switched on, calibration check frequencies shall be located at suitable intervals throughout the scale of the reference oscillator, since for the purpose of measurement, the reference oscillator is set to zero beat with a calibration harmonic and then left fixed. By this means, during the period of measurement, the accuracy of the reference-oscillator frequency may be the same as that of the crystal calibrator, thus contributing to the high accuracy possible from the system. Also, since the frequency of the reference oscillator, having been set in terms of a calibrator harmonic, remains fixed while the measurement is being made, in order for the

www.americanradiohistory.com

frequency equal to the difference between F_x and nF to be accepted by the i.f. unit, the latter must cover a frequency range sufficient to take account of the effects of the value of n used, and the fact that the reference oscillator is set always in terms of a calibrator harmonic which differs from F_x by an amount depending upon the calibrator fundamental frequency. Therefore the calibration frequencies must be such that when the variable reference oscillator is tuned to any one of these frequencies by the zero-beat method, and the calibrator then switched off, the difference between the nth harmonic of the reference oscillator and the fundamental of the unknown shall be within the frequency range of the i.f. unit. Thus the frequency of the calibrator (i.e., the frequency multiplier or medium frequency crystal), the frequency range of the reference oscillator and the highest values of n are all related. The following example illustrates this relationship :—

The fundamental frequency range of the variable reference oscillator may be conveniently 300 to 600 Mc/s, and the highest value of n, 20 ; this combination corresponds to a maximum measurable frequency of approximately 12 kMc/s.

The limit conditions between the reference-oscillator frequency F and the calibration check frequencies are

(1) when F coincides with a calibration check frequency, and (2) when F is midway between two calibration check frequencies.

Let the output frequency of the calibrator be 4 Mc/s ; then in (1)

$$F - F_h = 0 \text{ or } F_h - F = 4.0 \text{ Mc/s.}$$

and in (2)

$$F - F_h = 2.0 \text{ or } F_h - F = 2.0 \text{ Mc/s.}$$

Assuming the 20th harmonic of the reference oscillator to be the highest used, then from (1) the intermediate frequency must $= 0$ or $4 \times 20 = 80$ Mc/s, and from (2), the intermediate frequency must $= 2 \times 20 = 40$ Mc/s.

Thus an intermediate frequency range of 40 to 80 Mc/s would ensure a suitable calibration check frequency being available in conjunction with a 4-Mc/s crystal calibrator and values of n up to 20.

For maximum accuracy, the calibrator may also be used to check the accuracy of the i.f. oscillator in addition to that of the reference oscillator. Since the unknown frequency is always arranged to be related to a checked frequency of the reference oscillator during measurement, the calibration of the latter is not normally used for direct measurement, and need not, therefore, be of a high order of accuracy. As frequency determinations are made in terms of the i.f. oscillator frequency, and since the i.f. oscillator is set to zero beat with the frequency equal to the difference between F_x and nF, the accuracy of ganging between the i.f. amplifier and oscillator need not be of a particularly high order because the frequency of the i.f. oscillator is not a function of the i.f. amplifier ; the function of the latter is to provide rejection of unwanted heterodyne beats and increased sensitivity.

By means of the calibrator, which may be arranged to provide check points at intervals more frequent than 4.0 Mc/s if required, and by taking other precautions such as the provision of a reasonably linear frequency law and scale correction, accurate interpolation on the i.f. scale may be obtained.

Calibrator

Normally, adjustments to the crystal oscillator are required at infrequent intervals. How often depends on the stability of the crystal and its associated circuits as a whole, and also on the order of accuracy finally required. In good examples of 100-kc/s thermally-controlled crystal circuits, an accuracy of 2 or 3×10^{-8} may be expected over quite lengthy periods of time. Various refinements in adjustment technique are possible, although the general method is for a harmonic of the crystal oscillator and a signal derived from a standard frequency source to be mixed in a suitable receiver, and the difference frequency measured. The crystal-oscillator frequency is then adjusted, on the lines suggested earlier, until this difference frequency attains the required value. The choice of the standard frequency source again depends upon the order of accuracy required, and may, for example, be a laboratory standard, certain B.B.C. transmitters, American Bureau of Standards Transmitter WWV, the General Post Office transmitter at Rugby, etc. When it is desired to set the crystal-oscillator frequency to close limits (e.g., to 1×10^{-7} or better) special procedures are required ; if Δf is conveniently low, the number of beats per second may be determined by means of a stopwatch. Alternatively, an electronic-counting device may be used, or an observation over a portion of a cycle of the difference frequency may be carried out, and the change of phase angle noted.

The adjustment of the multiplier associated with the crystal oscillator in the calibrator follows normal practice. A thermionic voltmeter is connected across the output circuit of each stage in turn and each tuned circuit adjusted for maximum output at its own frequency. Finally, a heterodyne beat between the multiplier and the reference oscillator is obtained, and all the tuned circuits of the former re-adjusted to correct for

www.americanradiohistory.com

the voltmeter input capacitance which had been present previously.

I.F. Unit

The outputs from the calibrator and the i.f. unit are applied to the second mixer. The dial of the i.f. unit is set to the calibration point corresponding to the intermediate frequency (or multiple of the crystal frequency) at which the adjustment is to be carried out. The i.f. corrector capacitor is then adjusted until zero beat at this frequency is obtained. It may then be assumed that the calibration is correct in the zone around this calibration point; this zone extends from mid-way between two pairs of adjacent calibration points. It is assumed also that change of the corrector capacitance does not alter the linearity of the law of the i.f. oscillator tuning capacitor appreciably. By using the fundamental frequency of the low-frequency crystal in place of the multiplier output frequency, calibration checks at closer intervals may be carried out if required. Since the frequency of the i.f. oscillator is relatively low, the stability can be made correspondingly high, and after the warming up period i.f. calibration checks at a given frequency should be necessary at only fairly long intervals.

Reference Oscillator

The setting up of the reference oscillator is only required to be such that correct indentification of calibration check points is secured. As explained earlier, the i.f. oscillator may be used to provide initial major check points for identification purposes without any possibility of ambiguity. Then the 4.0-Mc/s crystal or multiplier is brought into operation instead, and identified calibration check points spaced at 4.0 Mc/s intervals are obtained for measurement purposes.

In order to illustrate the procedure of measurement, two examples are given; the first, of a frequency near the upper, and the second, of a frequency near the lower end of the range of measurement.

Example 1. *Measurement of a high frequency,* 10,509 *Mc/s.*

Refer to Fig. 10(b). The first step is to determine the order of the harmonic of the reference oscillator used for the purpose of measurement.

With the i.f. amplifier-oscillator and calibrator switched off, on rotation of the dial of the reference oscillator, heterodyne beats between the unknown F_x and various harmonics of the reference oscillator F will be obtained.

Suppose the heterodyne beat at 525.45 Mc/s (read approximately) is selected for the purpose of measurement, and that the i.f. amplifier oscillator is set to mid-frequency; i.e. 60.0 Mc/s. The i.f. amplifier-oscillator is switched on and the dial of the reference oscillator rotated each side of 525.45 Mc/s; channel beats will be obtained at 528.45 and 522.45 Mc/s (also read approximately). The difference between these channel beats is 6.0 Mc/s and therefore.

$$n = 2f/6 = 120/6 = 20.$$

The i.f. unit is switched off, and the crystal calibrator on; check beats will be obtained at 520, 524, 528, 532, etc., Mc/s. The reference-oscillator dial is set to zero beat with one of the four check frequencies associated with the two channels, such that an intermediate frequency within the range (40 to 80 Mc/s) of the amplifier-oscillator is obtained—in this case 528 Mc/s, since (528-525) $\times$ 20 = 60 Mc/s. The crystal calibrator is switched off and the i.f. amplifier-oscillator switched on, and the latter is adjusted to zero beat with the difference frequency 20 x 528 $- F_x$. The new i.f. will be read accurately as 51.0 Mc/s. Thus $F_x = 528 \times 20 - 51.0 = 10560 - 51.0 = 10509$ Mc/s.

Example 2. *Measurement of a lower frequency,* 1,078.7 *Mc/s.*

Using the same procedure as before, with crystal calibrator and i.f. amplifier-oscillator switched off, a beat between the reference oscillator and the unknown will be obtained when $F = 539.35$ Mc/s, read approximately. With the i.f. unit switched on, and set to 60.0 Mc/s, the channel beats will occur at 509.35 and 569.35 Mc/s, read approximately. Therefore

$$n = 2 \times 50/60 = 2$$

The crystal calibrator is switched on, a calibration frequency adjacent to one of the channels is selected, so as to give an intermediate frequency within the range 40 to 80 Mc/s of the i.f. amplifier-oscillator; i.e., 568 Mc/s. The i.f. unit is adjusted to zero beat, and the new intermediate frequency read accurately as 57.30 Mc/s. Then

$$F_x = 2 \times 568 - 57.30$$
$$= 1078.7 \text{ Mc/s.}$$

This example is illustrated in Fig. 10(c).

Low-Frequency Limit of Measurement

There is a low limit to the frequencies which can be measured by this method due to the fact that if the unknown frequency is less than twice the intermediate frequency, overlapping of the channels will occur. Confusion is therefore possible when the measurement of frequencies lower than approximately 100 Mc/s is attempted. For example, suppose $F_x = 90$ Mc/s; heterodyne beats between harmonics of F_x and the funda-

www.americanradiohistory.com

mental of the reference oscillator will occur when $F = 360$, 450 and 540 Mc/s.

Suppose the intermediate frequency is 50 Mc/s; then channel beats will occur when $F = 310$, 410, 400, 500, 490 and 590 Mc/s, and identification of the correct beats will be difficult. In addition, from an accuracy point of view, the system is not superior to more direct methods of measurement.

Lower frequencies could be measured directly by means of the amplifier-oscillator and the crystal-calibration, but again the advantages and accuracy obtaining at high frequencies would not be available.

High-Frequency Limit of Measurement

In general, in order to extend the range of measurement upwards, one or more of the following steps must be taken :—

Raise the frequency of the reference oscillator and of the i.f. amplifier-oscillator unit; use higher-order harmonics of the reference oscillator and lower the crystal-calibration frequency.

Suppose

F_x, the frequency to be measured = 60,000 Mc/s.

$F_k = 4$ Mc/s.

F_1 the frequency of the reference oscillator, = 300-600 Mc/s, and that the immediate frequency range is 40-80 Mc/s.

The 100th harmonic of the reference oscillator would be the lowest possible for the measurement of 60 kMc/s (since 100×600 Mc/s = 60,000 Mc/s).

Then, if F_1 and F_2 are the upper and lower channel frequencies in Mc/s, and the intermediate frequency is 60 Mc/s,

$100(F_1 - F_2) = 2 \times 60$, as explained earlier

$\therefore F_1 - F_2 = 1.2$ Mc/s, and the frequency spacing between each of the channel frequencies and the direct beat between F_x and the reference oscillator harmonic is $\frac{1.2}{2} = 0.6$ Mc/s.

Thus, to meet the conditions which determine the crystal-calibration frequency, the latter must be reduced to approximately 1.0 Mc/s. Alternatively, the intermediate frequency could be increased in the same order as the unknown, in this case five times. This would not be satisfactory, since the intermediate frequency would then lie within the fundamental range of the reference oscillator.

It is uncertain whether the amplitude of the 100th harmonic of the reference oscillator would be sufficient for the purpose and also whether the efficiency of a wide-range mixer would be adequate at 60 kMc/s.

These steps aggravate stability and sensitivity problems, while reduction of the crystal-calibration frequency also makes further demands on the dial and scale of the reference oscillator owing to the reduced spacing between calibration points.

In view of these considerations, it is not easy to make a precise estimate of the upper limit of measurement by the proposed method; however, it is probably lower than 60 kMc/s.

Accuracy Obtainable

The accuracy depends on (1) the accuracy of frequency of the crystal calibration oscillator, which includes not only the accuracy of finish of the plate or bar, but also the effect of circuit conditions and temperature, (2) the accuracy of setting to two zero beats, (3) the accuracy of interpolation on the i.f. scale, (4) the ratio of the unknown to the intermediate frequency, and (5) the stability of the reference oscillator during the period of measurement.

By means of circuit adjustment of the crystal oscillator in the calibrator unit and thermal control, the frequency of this oscillator may be maintained to better than one or two parts in a million of nominal; the errors due to setting to zero beat should be very small indeed; the accuracy of interpolation on the i.f. scale should not be worse than 1 in 10^4 at the intermediate frequency; at a frequency of 5000 Mc/s the effect of this error would be of the order of 1 in 10^6 on the measurement. The drift of the reference oscillator over a period of say, one minute can be made negligible after the preliminary warming up period. At the expense of increased complexity, locking of the reference oscillator at 4.0 Mc/s intervals by the crystal oscillator or multiplier in the calibrator unit could probably be effected. An alternative and simpler method would be to monitor the reference oscillator throughout the period of measurement.

With care in design, it is considered that the overall error at 5 kMc/s may be of the order of 4 or 5 parts in 10^6.

Acknowledgment

The author wishes to thank the Chief Scientist, Ministry of Supply, for permission to publish.

www.americanradiohistory.com

STANDING WAVES AND IMPEDANCE CIRCLE DIAGRAMS

Graphical Approach to Transmission-Line Theory

By C. H. Westcott, Ph.D.

(*Physics Department, Birmingham University*)

WITH the increasing use of ultra-short wavelengths, the subject of standing waves on feeders and the associated impedance relationships is of considerable importance. It is also, to many, a subject clouded with obscurity, involving ploughing through long algebraic expressions including hyperbolic tangents and the like. In this article, an alternative approach to the subject is described, starting from the concept of a pure travelling wave and the laws of superposition. In the opinion of the author, this approach, and graphical methods generally, are greatly to be preferred in that they give physical insight into the phenomena; a better understanding is obtained by reducing algebra to a minimum and the quantities required can be computed from charts with an accuracy which is usually amply sufficient for the purposes in hand. A study of the waveform and relative phase of a standing-wave pattern leads naturally to the polar form of the impedance circle diagram, which is the form most suited to the majority of computations. The modification to the normal chart which is required to deal with lossy lines, whose characteristic impedance is complex, is also considered.

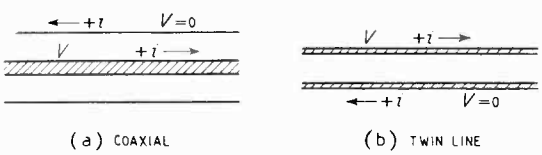

Fig. 1. *Convention of sign for voltage and current. The convention shown is natural for waves travelling to the right.*

1. Travelling and Standing Waves

When a transmission line is terminated by a load equal to its characteristic impedance* Z_0, we obtain a pure travelling wave. In this case the voltage is everywhere in phase with the current, and their ratio $V/I = Z_0$; also, the phase at a given moment varies uniformly along the line at the rate of 2π per wavelength. It is convenient to introduce units 'normalized' with respect to Z_0, so that the current and voltage in such a pure travelling wave become numerically equal; for example, we may retain the ampere as the unit of current, the unit of potential then becoming Z_0 volts. In this way the impedance at any point on a purely travelling wave becomes unity. Another normalization,

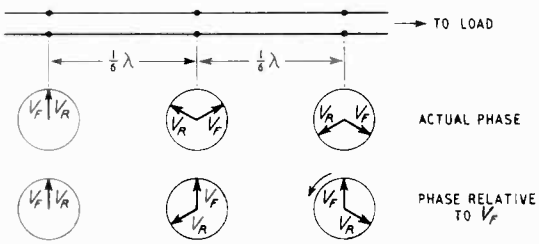

Fig. 2. *Phase relations of the partial waves.*

which keeps the unit of power unchanged, is to alter the unit of current to $1/\sqrt{Z_0}$ amperes and of voltage to $\sqrt{Z_0}$ volts. In either case we may denote normalized quantities with small letters, writing, for example, $z = Z/Z_0 = r + jx$, where z is the normalized impedance, and r and x the normalized (series) resistive and reactive components. Similarly, for the pure travelling wave, we have $v = i$ (instead of $V/I = Z_0$); there is, however, an ambiguity of sign, for we may also have $v = -i$. The two cases correspond to waves being propagated in opposite directions along the line, since the energy is propagated in the direction in which the current flows in that conductor which is momentarily positive. Thus, with the sign convention shown in Fig. 1, $v = i$ applies for a wave travelling to the right, while $v = -i$ would give a wave travelling to the left.

In any line whose termination is not exactly Z_0, we obtain a 'standing wave' as the result of the superposition of waves travelling in both directions. Generally, the standing wave is not 'complete'; i.e., the 'backward' travelling component, produced by reflection at the termination, is smaller in amplitude than the 'forward'

MS accepted by the Editor, March 1948

* For simplicity, we assume initially that Z_0 is real, and we consider a transmission line without attenuation.

www.americanradiohistory.com

travelling component. Each constituent wave varies in phase along the line at a given moment, but the phase changes are in opposite directions. It is convenient to take as a conventional phase zero, the phase of a 'forward' travelling component, or of a pure forward-travelling wave; we must then reckon the phase of the 'backward' component as changing by 2π for every $\lambda/2$ we go along the line. As we go towards the load, the relative phase of the reflected wave leads increasingly (cf. Fig. 2).

2. Vector Diagram

To obtain the resultant voltage or current at any point on the line, the two components must be compounded vectorially. Thus, writing v_f and i_f for the forward components, and v_r and i_r for the reflected or backward-travelling components, we have $v = v_f + v_r$, and $i = i_f + i_r$, v and i being the normalized voltage and current at any point on the line. The addition sign represents vectorial, or complex algebra, addition.

In Fig. 3, we let OC, a vector of length R, represent v_f at a point distant l from the load. If the voltage reflection coefficient of the load is $k \cdot e^{j\phi}$ (k real, $0 \leqslant k \leqslant 1$), then v_r at the same point is represented by a vector (CP, Fig. 3) of length kR at an angle $\theta = \phi - 4\pi l/\lambda$ to OC produced. θ is the phase of v_r with respect to v_f, and changes at the rate of 2π for every $\lambda/2$ we go along the line; i.e., P moves round a circle of radius kR

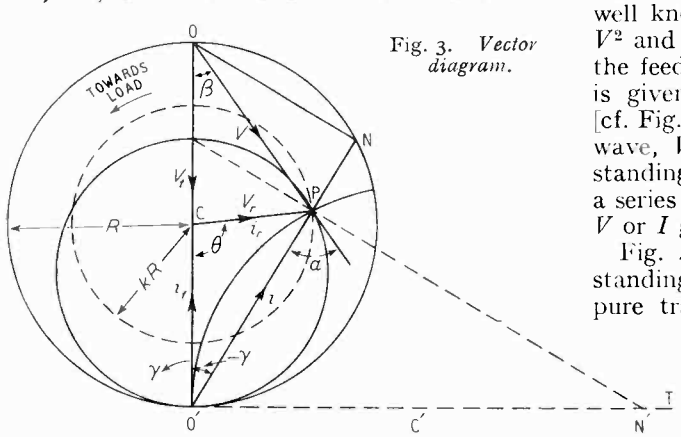

Fig. 3. *Vector diagram.*

on C as centre at this rate, the direction of positive rotation (anti-clockwise) representing motion toward the load. Adding the two vectors OC and CP, we see that the vector OP represents in magnitude and phase the voltage v at the point in question on the line. The phase, β, is of course relative to that of a forward-travelling component, a phase advance (anti-clockwise on figure) being positive.

To obtain the vector representing the current, we might proceed similarly, drawing CP′ at 180° to CP to represent i_r, but it is simpler to change the convention of sign for the current so that $v = i$ for the backward instead of the forward component, giving $v_f = -i_f$. On Fig. 3, then, we draw O′C, or length R, equal to OC but at 180° to it, and let this represent i_f. The advantage of this procedure is that the same vector CP represents i_r as well as v_r, and there is only one point P which moves when we go along the line. In fact, the point P completely represents conditions at the given point on the feeder, and is referred to as the 'representative point'. O′P then represents in magnitude and phase, with respect to O′C as the forward-travelling wave, the current at the point in question on the line. In Fig. 3 γ, the phase advance of the current with respect to the forward wave phase, is negative (CÔ′P, being a phase-lag, is $-\gamma$).

3. Form and Phase of Standing Wave

As P moves round its circle of radius kR, we see that the vectors OP and O′P have maxima of $(1 + k)R$ and minima of $(1 - k)R$, so that the standing-wave ratio ρ is given by $\rho = (1 + k)/(1 - k)$, or $k = (\rho - 1)/(\rho + 1)$. The form of the standing wave (i.e., its amplitude as a function of distance along the line) is now readily obtained. From triangle O′CP, $I^2 \propto (1 + k^2) - 2k \cos\theta$, and from triangle OCP $V^2 \propto (1 + k^2) + 2k \cos\theta$. This leads to the simple, but apparently not very well known,† result that for any standing wave V^2 and I^2 vary sinusoidally with distance along the feeder. In general the magnitude of V or I is given by much more complex expressions‡ [cf. Fig. 4(a)]; only when $k = 0$ (pure travelling wave, V and I constant) and $k = 1$ (complete standing wave, the magnitude of V or I being a series of positive semi-sinusoids) is the form of V or I given by simple expressions.‡

Fig. 4(b) illustrates the phase relations in a standing wave, as obtained from Fig. 3. For the pure travelling wave [$k = 0$, A, Fig. 4(b)] the instantaneous phase varies linearly with distance along the line. For any other wave, β and γ, Fig. 3, represent the departures from this condition. Consider, for example, the complete standing wave ($k = 1$); here P moves round the circle on OO′ as diameter, and $\beta = \theta/2$, $(-\pi < \theta < \pi)$. When P is just to the left of O, $\theta \approx -\pi$ and $\beta \approx -\pi/2$; as we move toward the load, β increases uniformly at the rate of $\pi/2$ for each $\lambda/4$ of line, becoming zero when P

† "Transmission-Line Impedance Measurement," by R. J. Lees, C. H. Westcott and F. Kay. *Wireless Engineer*, March 1949, Vol. 26, p. 78.

‡ See, for example, Willis Jackson, "High Frequency Transmission Lines," Methuen, 1945, pp. 75-76. Although giving the full expressions for V and I, he does not mention the simple property of V^2 and I^2.

www.americanradiohistory.com

passes O′ and approaching $\pi/2$ as P approaches O from the right. Then, as P passes through O, at the voltage node, the phase suddenly changes by 180°. Consequently the actual phase of the voltage, obtained by adding β to the phase of

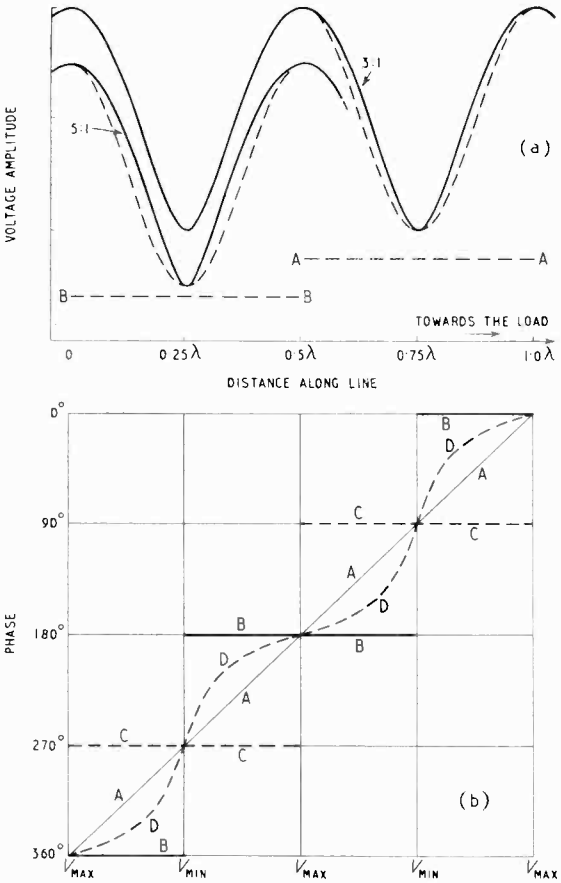

Fig. 4(a). *Voltage amplitude in standing waves (ratios 3 : 1 and 5 : 1 shown). The dotted curves are sinusoidal for comparison. If the dotted curves are read from the lines A-A and B-B as axes, they give the law of variation of V^2 along the line, for the two waves shown with arbitrary voltage units.* (b) *Phase variation in standing waves; A, pure travelling wave. B, complete standing wave, phase of voltage. C, complete standing wave, phase of current. D, 3 : 1 standing wave (cf. Fig. 4a), phase of voltage.*

the forward-travelling wave, remains constant over this $\lambda/2$ length of line, and then suddenly jumps 180°. This is the well-known elementary result. The current nodes occur $\lambda/4$ away from the voltage ones, when P passes through O′, and the jumps of phase of current occur here, the current and voltage remaining always in quadrature with one another (OP and O′P on the diagram being perpendicular).

For a partial standing wave the phase tends to the same behaviour, but the changes are not abrupt. Curve D, Fig. 4(b), shows the effect for a 3 : 1 standing wave. Near the voltage minimum P passes close to O, so that β changes rapidly. The change being in the same direction as that of the forward component, the total phase changes very rapidly near the minimum and slowly near the maximum. The phase pattern for current is similar but occurs $\lambda/4$ further along the line. The current and voltage are in phase at the maxima and minima, and alternately lead and lag in between.

4. Impedance Circle Diagrams

Since the point P represents conditions at a certain point on the line, it must also represent an impedance. It is perhaps easiest to work in terms of the magnitude $|z|$ and phase-angle α of the impedance given by $z = r + jx = |z|\, e^{j\alpha}$. $|z|$ is given by the ratio of $|v|$ to $|i|$ (i.e., by the ratio of the lengths OP/O′P on Fig. 3,) while α is the angle between PO′ and OP produced, since we have turned the current vectors through 180° in drawing the diagram. In fact, $\alpha = \beta - \gamma$, so that we see that in the figure α is positive, the voltage leading the current and the effective load being inductive. Elementary geometry shows that the loci of constant $|z|$ are a family of coaxial circles having O and O′ as limiting points, while the loci of constant α are the orthogonal family having O and O′ as common points. The centres of the former circles lie on OO′ produced, and their intercepts divide OO′ internally and externally in the ratio $|z| : 1$, the locus of $|z| = 1$ being the straight line through C perpendicular to OO′. The α circles have their centres on this same line, at a distance $R \cot \alpha$ from C, so that OO′ subtends 2α at the centre (C′, Fig. 5, for $\alpha = 30°$). OO′ itself is the locus of $\alpha = 0$, and C the point $z = 1$, O being $z = 0$ and O′, $z = \infty$.

We see then that Fig. 5 is an impedance circle-diagram, being in fact the same diagram as Fig. 3 but with an impedance mesh drawn on it. A more familiar form is obtained by working in terms of r and x instead of $|z|$ and α. This can be obtained from Fig. 5 by conformal transformation, but it can also be obtained directly, realizing that $r = |z| \cos \alpha$ and $x = |z| \sin \alpha$. Dropping a perpendicular ON (Fig. 3) from O on to O′P produced and noting that N lies on the outer circle of the diagram and that $O\hat{P}N = \alpha$, we see that PN represents $|v| \cos \alpha$ while ON represents $|v| \sin \alpha$. Therefore r is given by PN/O′P, and z by ON/O′P. The locus of constant r is therefore given by O′P/O′N $= 1/(1 + r)$, and is a circle of radius $R/(1 + r)$

www.americanradiohistory.com

passing through O′ with its centre on OO′. Further, by drawing PN′ perpendicular to O′P to meet the common tangent O′T in N′, we see that the triangles OO′N and O′N′P are similar and that $O'N' = 2R/x$. The circle on O′N′ as diameter (radius R/x, centre C′, touching OO′ at O′) is therefore the locus of constant x. In this way we obtain the impedance mesh shown in Fig. 6, which is just the familiar polar form of the impedance circle-diagram. This is, in fact, the same plot as the vector diagram of Fig. 3, the point P being in just the same place on both diagrams. It follows that the phase angles β and γ may be read directly off Fig. 6, or Fig. 5 for that matter, whenever required. This property of the diagrams does not appear to be at all well known.

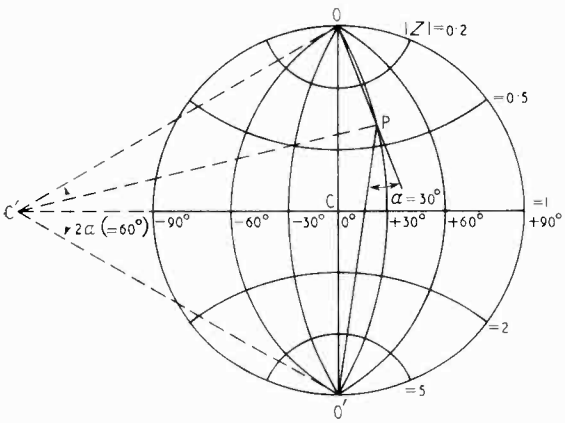

Fig. 5. *The impedance mesh—magnitude and phase angle.*

The same diagram inverted (i.e., with O and O′ interchanged) gives the components of admittance ($a = 1/z = g + jy$) and thus the shunt resistive ($1/g$) and reactive ($-1/\nu$) components. This fact is readily understood by interchanging the v- and i- vectors in Fig. 3; it may also be seen from Fig. 5, where the loci of $|z|$ and $1/|z|$ lie symmetrically between O and O′. When used in this way it must be remembered that O, the origin for the voltage vector, and the point $z = 0$, is now $a = \infty$, and is at the bottom of the diagram if the mesh of Fig. 6 is used. O′, the origin of the current vector, is the $a = 0$ point. Otherwise the diagrams can be used in just the same way—all angles are still measured anti-clockwise and the point P moves the same way round the diagram. In practice, it is frequently advisable to work in admittances, since feeders are more often paralleled than connected in series, and admittances in parallel are additive. The conversion from impedance to admittance is readily made by turning the vector CP through 180°.

5. Transmission Lines with Attenuation

These ideas can be readily extended to cover cases where the attenuation in the transmission line is important. As is well known, the characteristic impedance of a line having resistance R, inductance L, shunt conductance G and capacitance C per unit length is given by $Z_0 = \sqrt{(R + j\omega L)/(G + j\omega C)}$. In the simple case when $R/L = G/C$, Z_0 remains real, and the only change we have to make in the methods already described is to introduce an attenuation of each component wave. Although the forward travelling component varies as $e^{\kappa l}$ (l being measured from the load), we continue to represent it at any point by the vector OC or O′C, of *constant* length R. The reflected component varies as $e^{-\kappa l}$, so that on the diagram we have to vary the vector CP as $e^{-2\kappa l}$ to allow for the change of scale. P therefore describes an equiangular spiral as we move along the line, moving inwards as we go towards the generator; the shrinkage of CP per *revolution* is the same as the voltage attenuation of a pure travelling component per *wavelength* of line. P then remains the representative point in the sense previously used, and describes the impedance changes directly. However, when voltages and currents at different points on the line are to be compared, the change-of-scale factor $e^{\kappa l}$ must not be overlooked.

The case when Z_0 is complex is also interesting, although in practice it is often sufficient to treat Z_0 as real, especially when the attenuation is small. For an exact treatment we write $Z_0 = |Z_0|\, e^{j\delta}$, where δ represents the angle by which the current and voltage are out of phase in a pure travelling wave on the line. It should be noted that if the attenuation is wholly due to dielectric losses (i.e., $R = 0$), $\tan 2\delta = G/\omega C$, while if due to conductor losses ($G = 0$), $\tan 2\delta = -R/\omega L$. The general result is

$$\delta = \tfrac{1}{2}\left(\tan^{-1}\frac{G}{\omega C} - \tan^{-1}\frac{R}{\omega L}\right)$$

while the attenuation constant is

$$\kappa = \frac{2\pi}{\lambda}\tan\tfrac{1}{2}\left(\tan^{-1}\frac{G}{\omega C} + \tan^{-1}\frac{R}{\omega L}\right)$$

or approximately

$$\delta = \tfrac{1}{2}\left(\frac{G}{\omega C} - \frac{R}{\omega L}\right);\ \kappa = \frac{\pi}{\lambda}\left(\frac{G}{\omega C} + \frac{R}{\omega L}\right).$$

We see that if κ is small, δ must be small, and δ must always lie within the limits $\pm\, \kappa\lambda/2\pi$.

Considering the vector diagram, we see that we may draw triangles OCP and O′CP to represent the voltages and currents as before. If OC and O′C represent respectively the voltage and current of the forward wave, OCO′ being a straight line, we obtain, as before, a single point

www.americanradiohistory.com

P such that CP represents both voltage and current of the reflected wave. This can still be done since δ has the same sign for waves travelling in either direction, although now all current vectors are displaced in phase by $180° + \delta$ (instead of 180°) with respect to all voltage vectors. To retain the simple properties of a 180° displacement, would necessitate two separate points P and P′, and the possibility of representing impedance by a point would be lost.

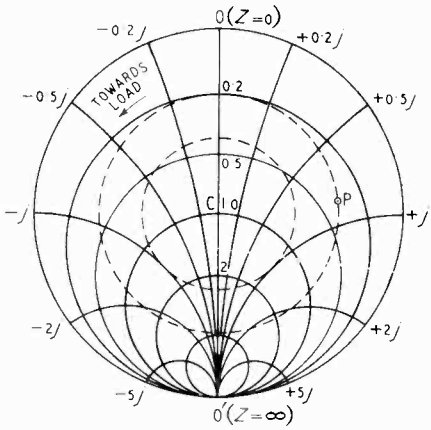

Fig. 6. *The impedance mesh—resistive and reactive components.*

When Z_0 is real, the point P moves on an equiangular spiral about C as we move along the line. The point P then correctly gives the quantity $z = Z/Z_0$ on the co-ordinate system of either Fig. 4 or Fig. 6, but when Z_0 is complex the result requires further interpretation. From the practical point of view one will prefer to normalize Z against $|Z_0|$, writing $z' = Z/|Z_0|$, so that when Z is real (i.e., resistive), z' is also real. If this is done, the loci of r' and x' (the components of z') may be drawn, but the result is not as simple as Fig. 6, and unfortunately the circles require to be redrawn for every different value of δ. It is therefore preferable to work in terms of magnitude and phase, as in Fig. 4, using the fact that $z' = z.Z_0/|Z_0| = z.e^{j\delta}$. The co-ordinate system is then only altered by a re-labelling of the α curves.

Fig. 7 shows the new diagram for the case of $\delta = -10°$. C is the centre of the diagram, about which the point P describes its equiangular spiral, while O and O′ are the origins of the voltage and current triangles respectively. The straight line OCO′ now represents $\alpha = -10°$, while the circular arc OC″O′ represents the locus of real z' (resistive impedances). The circle representing $\alpha = \pm 90°$ has its centre at C′, given by $O\hat{O}'C' = 10°$, forms the outer limit of the diagram, given by the physical condition that the resistive component of the load cannot be negative ($r' \geqslant 0$). The large dotted circle ($r = 0$) has now no physical significance, for when Z_0 is complex the real part of Z/Z_0 is not necessarily positive. The resulting asymmetry of the diagram is immediately obvious; the diagram for a positive δ would be asymmetrical in the opposite direction. The diagram is used in just the same way as Fig. 4, the impedance being read off directly from the position of P. It is interesting to note that the angle of the equiangular spiral which P describes is given by $\tan^{-1} \kappa\lambda/2\pi$, which, as we have seen, cannot be numerically less than δ. If this condition did not exist it would be possible, starting on or inside the outer circle ($\alpha = \pm 90°$) to move along the line and reach a point outside this circle; i.e., to produce a load with a negative resistive component. As it is, the angle of the spiral inwards is always greater than the angle the outer circle makes with the vector from C, which reaches its maxima of $\pm\delta$ at O and O′. The case drawn in

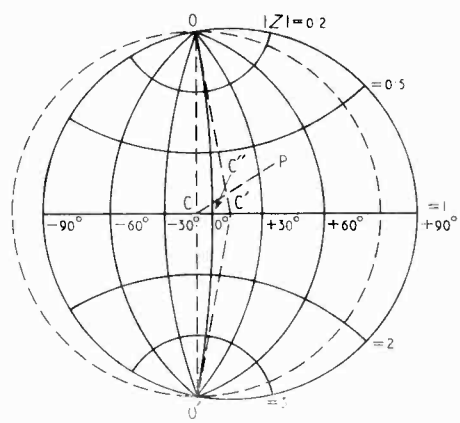

Fig. 7. *An impedance mesh for a case of non-resistive Z_0.*

Fig. 7 corresponds to the losses being mainly conductor losses, so that near O′, where the current is small, the spiral would follow the outer circle closely, while near O, where the currents are large, it would spiral inwards at an angle 2δ from the outer circle. This corresponds to the physical fact that the losses in such a system are concentrated at the current anti-nodes. The diagram for a positive δ, corresponding to mainly dielectric losses, would have the opposite asymmetry so that a spiral could follow the outer circle closely near O, where the voltage is small, and the losses are small also.

www.americanradiohistory.com

EARTHED-GRID POWER AMPLIFIERS

V.H.F. Sound and Vision Transmitters

By P. A. T. Bevan, B.Sc., A.M.I.E.E.,

(Engineering Planning and Installation Department, B.B.C.)

(Concluded from p. 192, June issue)

6. Power Gain

IN Section 5 the neutralizing of a symmetrical amplifier has been discussed. In particular, the neutralizing of the effects of the valve anode-to-cathode feedback capacitance, either by cross-connected capacitors or by the introduction of an inductive reactance between grids, has been treated. From this it is evident that a neutralized condition could also be established by the combined use of an appropriate neutralizing reactance between the grids and anode-to-cathode cross-connected capacitors. These capacitors would have values which differ from the anode-to-cathode capacitances of the valves.

Such an arrangement is shown in Fig. 8 with its equivalent circuit. It has been shown by J. J. Muller[3] that the circuit behaves as though the cross-connected neutralizing capacitors were not present and the effective anode-to-cathode capacitance c'_{ak} of each valve were equal to the difference between the real value of the anode-to-cathode capacitance c_{ak} and the neutralizing capacitance C_n and also as though there existed between the two anodes and the two cathodes two capacitances equal to C_n. These latter capacitances, however, have no direct bearing on establishing the neutralized condition.

The appropriate value for the grid reactance Z is now given by :

$$Z = \frac{X_{ag}\,X_{gk}}{X_{ag} + X_{gk} + X'_{ak}}$$ where X'_{ak} is the reactance of $c_{ak} - C_n$.

It is evident that if C_n is equal to c_{ak}, the impedance Z must be zero ; i.e., the normal case. If C_n is smaller than c_{ak}, the impedance Z is positive and must be an inductive reactance, while if C_n is larger than c_{ak} but smaller than

$$c_{gk} + \frac{c_{ag}\,c_{gk}}{c_{ag} + c_{gk}}$$

the impedance Z is negative and must be a capacitive reactance. Values of C_n greater than this previous value would make Z inductive again, but this would not be a practical case.

If C_n is equal to c_{ak} so that Z is zero, the cathode-earth voltage E_c required from the driver is the same as the cathode-grid voltage needed correctly to drive the valve for the required power output $W_a = E_a I$. If C_n is smaller than c_{ak} the neutralizing inductive reactance between grid and earth introduces a positive feedback voltage between cathode and grid. Thus, for the same cathode-to-grid drive and power outputs of the amplifier valves, the output voltage E_c required from the driver is reduced by the amount of the positive feedback voltage. The drive output power $W_t = E_c I$ is thereby correspondingly reduced and the power gain W_a/W_t of the amplifier is increased compared with the previous case. Similarly, if C_n is greater than c_{ak} the capacitive reactance between grid and earth introduces a negative-feedback voltage between cathode and grid so that for the same cathode-to-grid drive and power output the output voltage E_c from the driver must be increased. Thus the driver power is increased and the power gain of

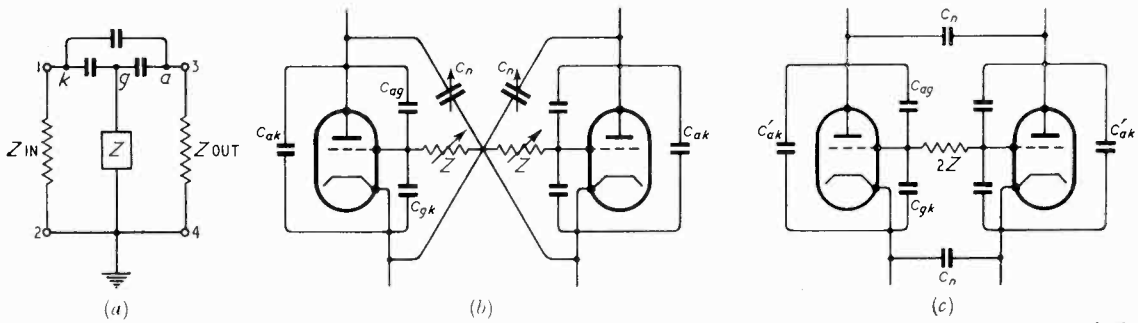

Fig. 8. *(a) Equivalent network of earthed-grid amplifier in which the network is adjusted to give zero feed-through between input and output and reciprocally by the introduction of a reactance Z between grid and earth ; (b) neutralization of earthed-grid amplifier for power gain control by combination of cross-connected capacitors and reactance between grids ; (c) equivalent circuit of (b),* $c'_{ak} = c_{ak} - C_n$.

www.americanradiohistory.com

the amplifier is correspondingly reduced. The power gain is controlled by varying the ratio of E_c to E_a and the amplifier may be adjusted to operate either with a low driving voltage and power and a high power gain or a high driving voltage and power and low power gain. In the latter case the total output power to the load is, of course, greater because of the high proportion of power supplied by the driver. The larger types of valve specifically constructed for earthed-grid operation give power gains ranging from about 8 maximum to 2 minimum by this means.

In a conventionally neutralized class C amplifier the cathode-to-grid driving voltage, and hence the value of E_c required fully to drive the amplifier to saturation in the carrier condition, is determined by the grid bias, which is normally set at the lowest value compatible with valve efficiency and maximum power gain. If the grid bias is increased, however, the amplitude of E_c must be correspondingly increased to obtain equivalent driving conditions so that the power gain can be varied by changing the value of the bias potential. A limit is set by the maximum permissible value of the cathode-to-grid voltage (r.f. + d.c. bias) but power gains as low as 3 are practicable, in which case the driver will contribute 1/4 and the amplifier 3/4 of the total output power.

Each of these two methods of power gain control has its sphere of application. The first method is suitable in cases where the operating grid bias of the amplifier is fixed by other considerations. For example, in a grid-modulated linear amplifier in the audio case the bias must be set substantially at cut-off. In the video case, where the desirability of obtaining maximum power output from a valve of given filament emission implies that at modulating potentials corresponding to peak white the valve shall generate anode current pulses of the maximum possible amplitude and of 180° duration, Fig. 4 indicates that this requirement fixes the amplitude of the cathode-to-grid r.f. driving voltage, which in turn precisely determines the grid bias required to give the appropriate level of carrier output at picture black; i.e., the black level.

7. Filament Heating

In an earthed-grid amplifier the valve cathode is at a comparatively high r.f. potential above ground and this potential must be held off from the filament-heating supply. With a.c. heated filaments this is conveniently accomplished in short-wave transmitters (up to about 25 Mc/s) by the use of low-capacitance shielded filament transformers, and for v.h.f. transmitters, by conventional filament transformers in conjunction with one of the $\lambda/4$ transmission-line arrangements described below for d.c. heating. With amplitude-modulated transmitters, however, alternating-current heating for the valves of the final amplifier is not always permissible because, with transmitting valves having directly-heated cathodes taking several hundred amperes, it can result in a significant component of phase modulation at the a.c. supply frequency as well as an amplitude-modulated hum component. Thus, with short-wave long-distance sound transmitters, for example, hum can become apparent during multipath transmission, even if the radiated a.m. hum component is suitably low. In selected cases, however, where the operating frequency is low enough, say below 15 Mc/s, to permit the use of four valves in the output amplifier without introducing difficulties in the r.f. circuit construction, a Scott-connected filament transformer a.c. heating arrangement, together with hum feedback, makes it possible to reduce the overall hum level to better than about 55 db below 100% modulation.

In f.m. transmission the level of the radiated amplitude-modulated noise need not be better than approximately 50 db below the carrier amplitude, so that in general a.c. filament heating with a single valve f.m. amplifier is feasible.

With amplitude-modulated vision transmitters the maximum permissible amplitude of the radiated non-synchronous hum appears to be about —55 db at 500 c/s rising fairly linearly to —42 db at 50 c/s relative to a full white signal, and this requirement tends to preclude the use of a.c. filament heating for a final v.h.f. stage constructed around two valves of the CAT21 or BW128 class.

Where d.c. filament heating is desirable, the filaments of a push-pull amplifier can be fed through $\lambda/4$ chokes or via a transmission line formed by suitably spacing the two pairs of filament supply busbars themselves to form a balanced $\lambda/4$ line shorted for r.f. at the supply end by large capacitances.

An alternative method, which in high-power amplifiers is constructionally convenient and at the same time provides good screening between the anode and cathode circuits, is to run the filament-heating connections for each valve as a pair of close-spaced busbars and encase each pair in an earthed outer conductor or trough to form an unbalanced $\lambda/4$ line. An illustration of this arrangement for an earthed-grid parallel line v.h.f. amplifier is shown in Fig. 9. It is not necessary for the filament lines to be adjustable to exactly $\lambda/4$ for a range of operating frequencies, because the resulting reactance appearing between the cathodes can usually be allowed for by adjustment of the input-circuit tuning.

www.americanradiohistory.com

A modification of this arrangement is used to form the grid-cathode resonant line for the single sided coaxial type circuits described in Section 8.

8. Coaxial-Line Power Amplifiers

The construction of conventional 'wire-connected' and parallel-line circuits becomes increasingly difficult at frequencies above about 60 Mc/s, particularly for high-power amplifiers, due to the practical difficulty of obtaining inductive circuit elements short enough to give sufficiently low values of inductance to tune the valve interelectrode and stray capacitances and to the difficulty of avoiding stray mutual couplings.

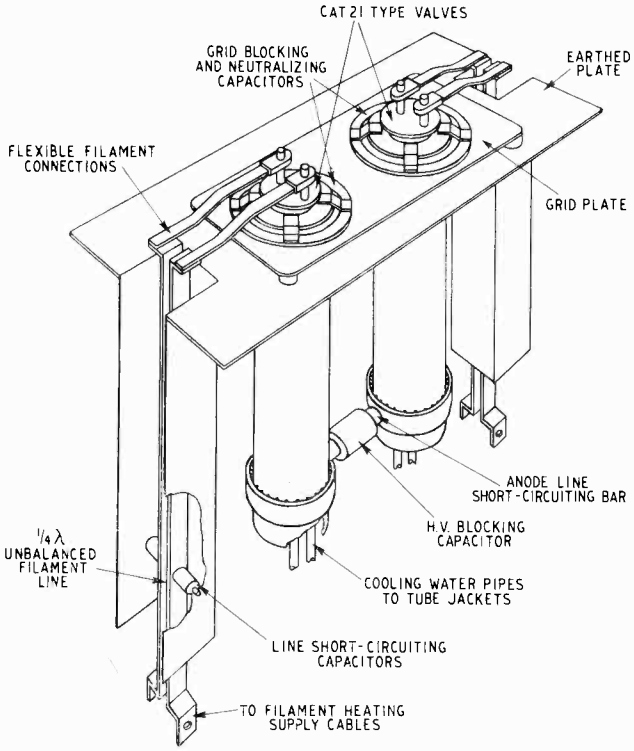

Fig. 9. *Typical part arrangement of a 50-kW earthed-grid parallel-line amplifier showing the construction of the λ/4 unbalanced lines for the filament-heating supply.*

The use of coaxial lines as circuit elements considerably eases the problem, because the relatively low Z_0 of such lines means that a longer length of line is required for a given inductive reactance, while the high degree of screening, and hence the ease with which the circuits may be isolated one from the other, is helpful in achieving a successful mechanical and electrically stable design.

The valves constructed for v.h.f. operation are usually characterized by the provision for a circumferential connection to the grid and anode so that a multipoint, or even a continuous, low-inductance connection may be made from a cylindrical coaxial-line element to these electrodes. Similarly, the electrodes themselves are either of cylindrical construction, disposed coaxially with one another, or of the parallel-plane type. The cathode-grid-anode order of electrode terminals points to the use of the grid as the valve element common to the input and output circuits so that the earthed-grid circuit is the logical practical choice from the constructional point of view. Furthermore, since the feedback capacitance between the input and output circuits is the anode-to-cathode capacitance, and this is much smaller than either the anode-to-grid or grid-to-cathode capacitances, the circuit in its coaxial form can conveniently be neutralized by the grid reactance method already discussed.

The earthed-grid coaxial circuit in its basic electrical and mechanical forms is shown in Fig. 10.

The anode-grid and grid-cathode tuned circuits are formed by sections of concentric line having a characteristic impedance Z_0 and electrical length θ such that at the required operating frequency they resonate the capacitances terminating the lines. The terminating capacitances are usually the anode-to-grid and grid-to-cathode interelectrode capacitances of the valve itself.

The coaxial lines are tuned by varying their electrical length θ by changing the position of an effective short-circuit between the inner and outer conductors. The short-circuit is usually constructed in the form of a non-contacting plunger which provides a low short-circuiting reactance between the inner and outer cylinders, or a movable ring having a set of inner and outer contact fingers which make a direct wiping contact with the cylinder walls. With the direct-contact method suitable blocking capacitors are required for the supply potentials applied to the anode and cathode, as well as the grid.

The $\lambda/4$ mode of resonance is the most usual for driven power amplifiers of the type under discussion, so that θ is less than 90°. The maximum overall length of the lines is primarily settled by the lowest operating frequency required and can

www.americanradiohistory.com

be determined from a knowledge of the capacitance X_c terminating the lines and the chosen Z_0 since for resonance :

$X_c = Z_0 \tan \theta$ and $l = 0.830/f$

Thus, the lengths l_1 and l_2 of the cathode-grid and anode-grid resonant lines are respectively given by :

$$l_1 = \frac{0.83}{f} \tan^{-1} \frac{X_{gk}}{Z_{01}} \text{ metres approx.}$$

$$l_2 = \frac{0.83}{f} \tan^{-1} \frac{X_{ag}}{Z_{02}} \text{ metres approx.}$$

The capacitive reactances X_g and X_{ag} are those at the lowest frequency in the required operating range.

An alternative method of tuning the co-axial lines is by varying the effective Z_0 but this is not usually so convenient mechanically as varying the effective length and in practice the tuning range tends to be comparatively restricted.

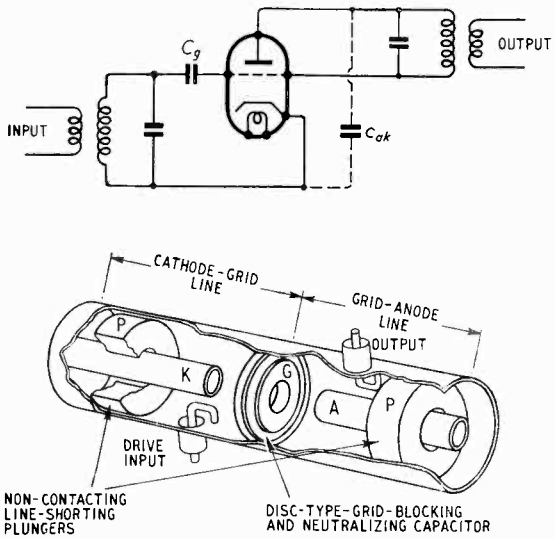

Fig. 10. *Basic electrical and mechanical arrangement of earthed-grid coaxial amplifier.*

The choice of the value of Z_0 is mainly determined by considerations of the loaded circuit Q and its influence on the modulation bandwidth response of the anode-grid tank circuit as previously described. Ideally, the expression for the input impedance of the line is treated as a pure reactance, but the line is actually a circuit element with distributed L and C constants. Thus, while the inductive reactance of a short-circuited section of line less than $\lambda/4$ long may be used to resonate the terminating capacitive reactance, the total capacitance in the resonant circuit is significantly increased by the capacitance distributed in the line and the distributed capacitance depends upon the Z_0 of the line. The required line reactance can be obtained either with a short line of high Z_0 or a longer line of low Z_0, but the effective Q of the short line when shunted by a given load resistance will be lower than that of the longer line because of the greater distributed capacitance of the latter. A wide bandwidth requires as low a circuit Q as possible for a given load impedance so that a short high-characteristic impedance line with low distributed capacitance is needed. In such a line the ratio of the diameters of the inner and outer conductors would be large.

Higher mode operation, say $3\lambda/4$, considerably complicates the issue from the circuit loaded Q point of view because the total stored energy in the circuit is considerably increased by the addition of the energy in the extra half-wavelength of line. Furthermore, with higher mode operation the loaded Q of a high-impedance type of line may be higher than that of a low-impedance line. This apparent anomaly arises because the stored energy depends not only on the distributed capacitance but also on the square of the voltage across that capacitance which, in the high-impedance line, is greater than in the low-impedance line. Thus, if the circuit is operated in the $3\lambda/4$ or higher mode, a line of low characteristic impedance will have the lowest loaded Q for a given load resistance and the widest bandwidth response. In general, the use of $3\lambda/4$ or higher mode operation for the anode-grid line is restricted to low power u.h.f. applications for obvious mechanical reasons.

In high power u.h.f. amplifiers of the type under consideration the choice of the physical diameters of the concentric inner and outer conductors is in practice mainly dictated by the minimum convenient diameter for the inner. For example, the diameter of the anode-grid line inner must be sufficiently large to accept the valve anode with its external radiator assembly and in a manner which allows the valve to be readily changed. With large triode transmitting valves of the BR128 or ACT21 type (see Fig. 2), which is the forced air-cooled version of the CAT21 and which is used in the 25-kW 88 to 108 Mc/s f.m. transmitter being constructed for Wrotham and the 12-kW 41 to 66 Mc/s a.m. sound transmitters for the Sutton Coldfield and Northern television stations, the minimum diameter of the inner for the anode-grid line is about 8 in, while the outer is of square section with approximately 18-in sides.

Such dimensions are unnecessarily large for the grid-cathode line so that in high-power amplifiers of relatively low frequency a number of departures from the simple basic construction

www.americanradiohistory.com

shown in Fig 10 are desirable in practice. For example, the combined overall length of the two coaxial lines is likely to be some 5 or 6 ft, and when this assembly is mounted vertically on an air chamber and exhaust ducts are led away from the top, the overall height of the transmitter cubicle containing the amplifier may prove excessive. In such cases the grid-cathode line may conveniently be constructed with inner and outer conductors of much smaller diameter than those required for the anode-grid line and can be taken rearwards and finally turned downwards behind the anode-cathode line. The pair of filament connections, themselves run closely spaced together, can conveniently form the inner conductor of the grid-cathode line.

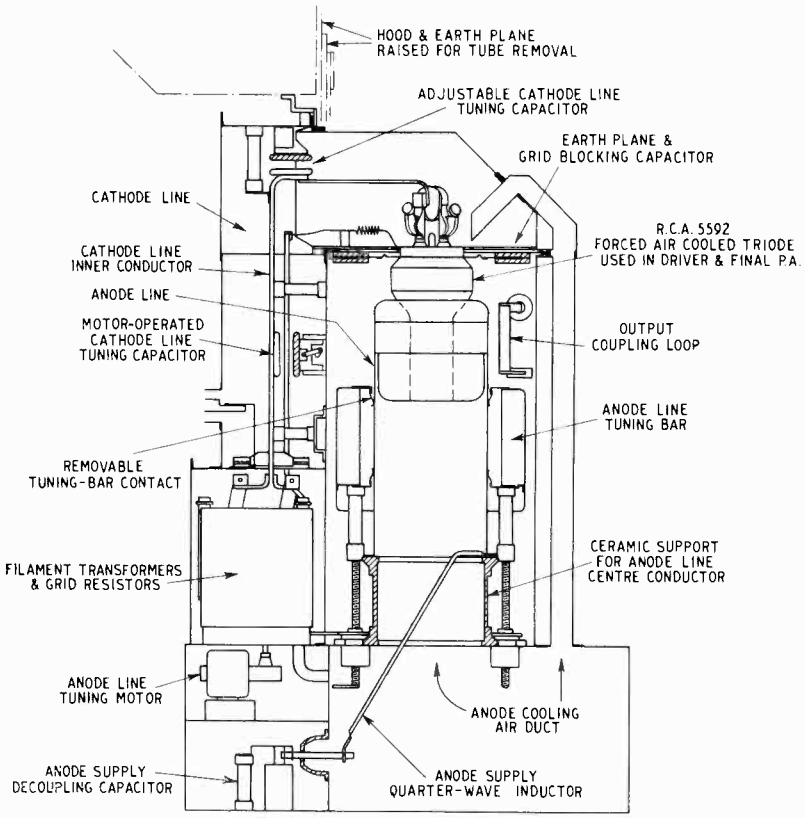

Fig. 11. *General arrangement of the R.C.A. 25 kW 88/108 Mc/s frequency modulated earthed-grid coaxial-line amplifier unit. (Reproduction by permission of "Tele-Tech").*

The driving power is supplied to the grid-cathode line by inductively coupling the driver to the inner (cathode) conductors by means of a single turn loop. The coupling is varied by changing the proximity of the loop to the cathode conductors. Similar arrangements are made for coupling the anode-grid line to the output transmission line. The maximum of the standing wave of current in the line is at a point close to the short-circuiting device and ideally the loop should be located near this point. With the $\lambda/4$ mode of resonance the positioning of the loops is not critical because the electrical length of the lines is considerably less than $\lambda/4$ so that the current density in the line is still high at the valve end. The loops can, therefore, be placed in positions which allow unrestricted movement of the short-circuiting plungers to cover the operating frequency range of the amplifier. Fig. 11 illustrates the commercial form of construction developed by the Radio Corporation of America for a 25-kW f.m. coaxial-line amplifier for operation at 88/108 Mc/s. The design follows logically from the considerations discussed above and has been described by J. C. Starner.[3]

The amplifier provides approximately 20 kW, and the driving stage 5 kW, of power to the output load. For higher powers two such amplifier units have to be operated in parallel and driven by an identical single driving stage to give a total output of 50 kW.

A basically similar design arrangement of two 10-kW amplifier units in parallel driven by a third 10-kW unit is used for the 25 kW f.m. transmitter being developed and manufactured by Marconi's Wireless Telegraph Co. Ltd. for the Wrotham (Kent) station of the B.B.C.'s proposed v.h.f. broadcast network. Some of the constructional features of the 10 kW unit are illustrated in the photographs of Fig. 12. The transmitting valve is a type BR128, which has similar characteristics to the ACT21 shown in Fig. 2.

In this type of construction the anode-grid coaxial line is formed by the square frame of the unit and a central tubular conductor mounted on a ceramic insulator. The transmitting valve is located in the top of the central conductor, the anode cooling radiator becoming part of this conductor. The earth plane common to the input and output circuits is formed by a

www.americanradiohistory.com

hinged flat plate which makes contact with the square outer conductor and which can be raised to remove the valve. The filament pins project through a central hole in the earth plane while the grid ring is connected to the earth plane via a grid blocking and neutralizing capacitor mounted on the underside of the grid plane and constructed from a number of sections symmetrically disposed around the grid ring. The actual connection to the grid ring is by means of a large number of spring contact fingers [see Fig. 12(a)]. The short-circuiting plunger for tuning the anode line takes the form of a box carried on lead screws and having spring contacts engaging the inner conductor and a clearance air gap between the box and the outer conductor.

The capacitive reactance of this short-circuiting box allows an anode line of given length to tune to a higher frequency than if direct contact were also made with the outer. In order to restrict the physical length of the line for the low-frequency limit the shorting box may be provided with two sets of inner contact fingers the upper set of which can be disengaged. The box then appears as a section of shorted line, next to the inner conductor, of the requisite length and Z_0 to resonate at the low-frequency limit with the open section of line next to the outer conductor. It is thus equivalent to a direct short-circuit between inner and outer at this frequency.

By this means an overall travel of some 7 or 8 inches only for the shorting box is required to tune the anode line over the full allocated frequency band of 88 to 108 Mc/s.

The physical dimensions of a valve of the BR128 class are such that at 108 Mc/s the electrical length of the filament and its internal leads is almost sufficient to tune to $\lambda/4$ resonance with the grid-cathode capacitance. This is inconvenient mechanically so the line is lengthened by the addition of an extra half-wave of conductor to form a capacitance-loaded $3\lambda/4$ coaxial line. The extra length of inner line is provided by the two filament busbars themselves, which are run rearwards from the valve and then turned downwards at the back of the anode line. The outer conductor of the grid-cathode line is also of square section and is mounted behind the rear

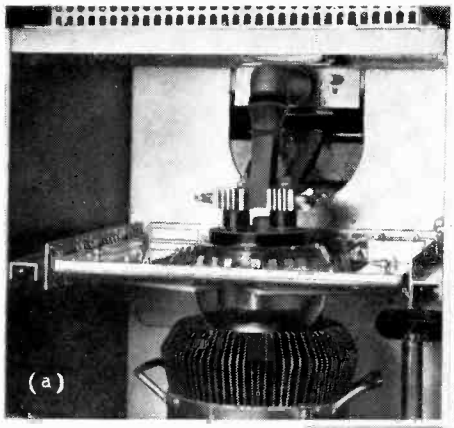

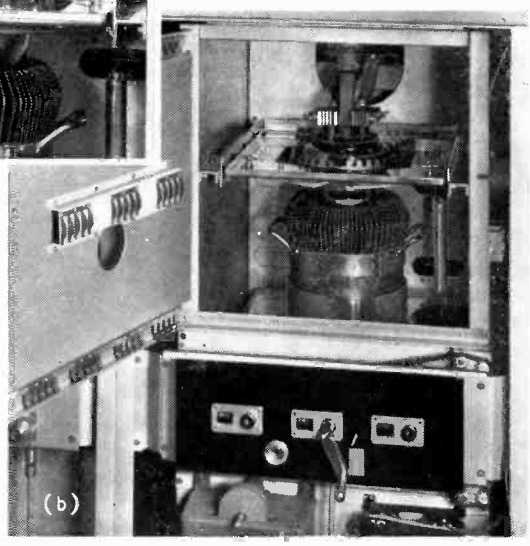

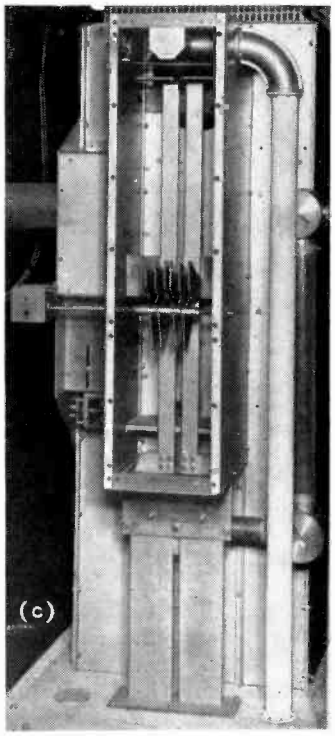

Fig. 12. *Views of 10-kW 88/108 Mc/s frequency-modulated earthed-grid coaxial-line amplifier.*

(a) Close-up view of the BR128 transmitting valve with the hinged grid plane in position, showing the anode, grid and filament connections. The output coupling loop is on the immediate right of the anode. The filament connections are taken rearwards to form the inner of the grid-cathode line.

(b) Similar to (a) but showing the manual controls for tuning the grid-anode and grid-cathode lines and adjusting the output coupling loop. The anode-grid line short-circuiting box can just be seen below the valve anode clamp.

(c) Rear view of unit showing the grid-cathode line (back cover removed), with its tuning capacitor at the centre, and harmonic break-up capacitor at the upper end of the line. The pipe which runs from the air chamber at the base of the unit and enters at the top carries the cooling air for the transmitting valve filament seal. The drive input transmission line can be seen entering the grid-cathode line at a point near its short-circuiting capacitor.

(Reproduction by permission of Marconi's Wireless Telegraph Co. Ltd.)

www.americanradiohistory.com

panel of the unit [see Fig. 12(c)]. The line is short-circuited at its lower end for r.f. by fixed capacitors which also serve to insulate the filament a.c. heating supply from earth.

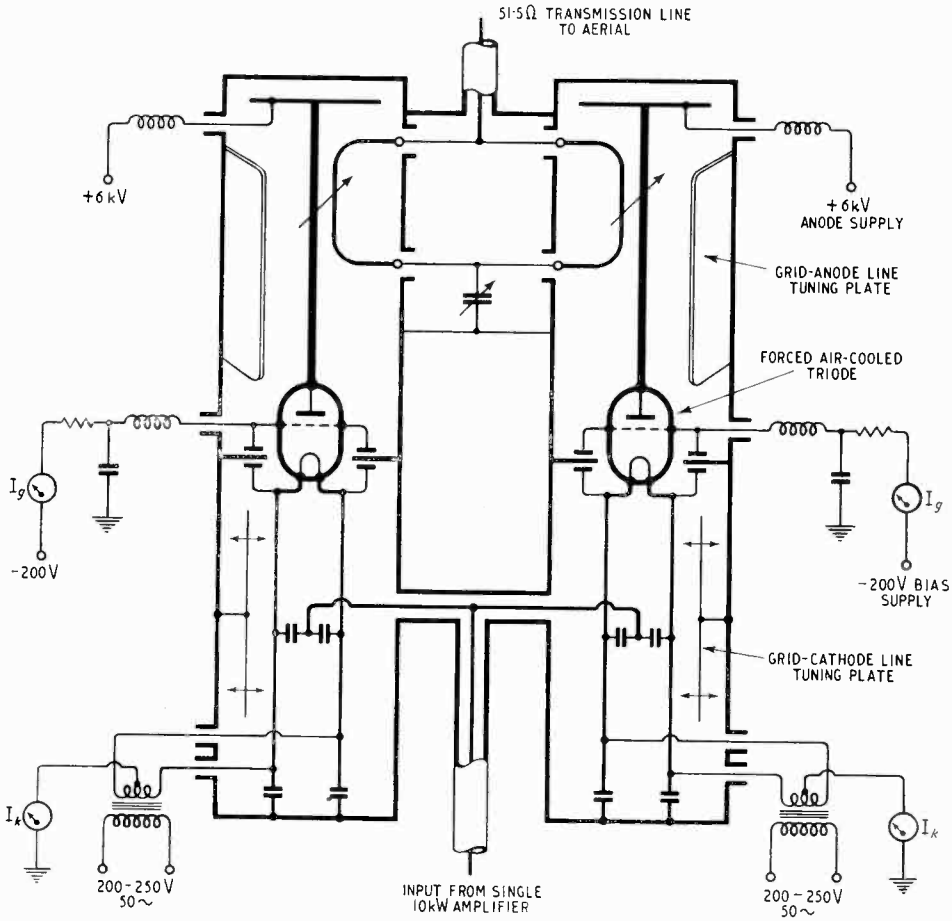

Fig. 13. *25-kW f.m. amplifier. Typical circuit arrangement of two 10-kW earthed-grid coaxial line f.m. amplifiers in parallel driven by a third 10-kW unit. In this case the tuning of the anode and cathode lines is accomplished by varying their effective Z_0.*

A flat-plate air-dielectric variable capacitor, placed at approximately $\lambda/4$ from the shorted end, is used to tune the line while a second air capacitor is placed at approximately $\lambda/2$ from the shorted end to reduce the impedance between grid and cathode for harmonic frequencies. The driving power is coupled to the cathode-line inner by an adjustable tapping bar fed from a concentric transmission line and positioned near the shorted end of the line at a point of suitable impedance. A single-turn loop, series tuned by a coaxial capacitor and located near the valve anode, is used to couple the anode line to the output concentric transmission line [see Fig. 12(a)]. The loop can be turned about a vertical axis to give a wide range of coupling and load control.

The 10-kW 88/108 Mc/s f.m. amplifier now under development by Standard Telephones and Cables Ltd. is being constructed on generally similar lines but the anode and cathode short-circuited coaxial lines are tuned not by varying their effective lengths but by changing their effective Z_0. This is accomplished by means of movable metal plates connected to the outer conductors and which can be brought closer to or farther from the inner conductors.

A forced air-cooled triode valve of the ring seal type is used and for the 25-kW transmitter it is intended that two 10-kW amplifier units should be mounted side by side in a double cabinet with their output coupling loops connected in parallel and tuned by a common variable capacitor. Fig. 13 illustrates a typical circuit arrangement for a 25-kW f.m. amplifier of this type. Similar amplifiers to those described above can also be used for amplitude modulated v.h.f. sound transmitters but the output carrier power would be restricted to some 70% of that with f.m. There is no doubt that, considering f.m. versus a.m. from the transmitter point of view, f.m. leads to a more compact and economical form of construction. The elimination of a high-power Class B audio modulator makes a very significant saving in the cost of the transmitter, and the constant amplitude nature of f.m. enables the valves to be operated at their optimum rating and efficiency which in turn is reflected in the power bill.

www.americanradiohistory.com

One cannot but be aware of the remarkable simplification in construction which the v.h.f. and more particularly the u.h.f. circuit and valve techniques are bringing into being. It seems that there is inevitably an initial phase of increasing complexity but finally all the calculations and ingenuity of the engineer culminate in the production of something whose guiding principle is the principle of simplicity. Indeed, one is tempted to say that perfection is attained not when there is no longer anything to add but when there is no longer anything to take away—Ars celare artem.

REFERENCES

[1] P. A. T. Bevan, "High Power Television Transmitters", *Electronic Engng*, May and June, 1947.

[2] C. E. Strong, "Inverted Amplifiers", *Elect. Commun.*, 1941, Vol. 19, No. 3.

[3] J. J. Muller, "Cathode Excited Linear Amplifiers", *Elect. Commun.*, September 1946, Vol. 23, No. 3.

SHOCK-IMPULSED SPIRAL TIME BASE

By G. H. Rawcliffe, M.A., D.Sc., M.I.E.E.

(*University of Bristol*)

SUMMARY.—A new method of producing a spiral trace on the cathode-ray tube is described. The method was originally devised as a lecture-demonstration to illustrate the principles of damped oscillations. These can be elegantly shown, together with their generating vector, by a double-beam oscilloscope.

The circuit has, however, been found to possess a number of interesting properties, both theoretical and practical, and a discussion of these may be of interest, apart from the particular application.

1. Introduction

THE Oxford English Dictionary treats the words 'helix' and 'spiral' as interchangeable. The writer uses the term 'spiral' to mean a trace resembling a watch spring, whereas a solenoid wound on a cylindrical mandril is called a 'helix.' The term is sometimes extended to cover the conventional representation of a helix, as used in electrical circuits to denote inductance. Strictly, the latter is neither a helix nor a spiral, but a uniplanar representation of a helix, but it has sometimes been called a spiral.

A stationary picture of a train(s) of damped oscillations can be obtained on a cathode-ray tube by repeatedly shock-exciting a resonant circuit, the frequency of shock-excitation being a sub-multiple of, and locked with, the frequency of the oscilloscope time base. The oscilloscope plates are usually connected across the capacitance in the resonant circuit.

The lower the frequency of repetition of the excitation, compared with the oscillatory frequency, the more completely will the oscillations be seen to die away, for a given degree of damping, and eventually a clear gap will appear between successive trains of oscillations.

A separate impulsing generator is not necessary, as the time-base voltage of the display oscilloscope itself can be used for exciting the resonant circuit, as shown in Fig. 1.

The advantage of doing this is that absolute synchronism occurs automatically: the disadvantage is that only one train of oscillations can be obtained on the screen. (The writer was shown this last method some years ago by Professor F. C. Williams—now of Manchester University—who states that, as far as he knows, this artifice was devised by himself. The writer has not seen it mentioned in any of many books and publications relating to the cathode-ray tube.)

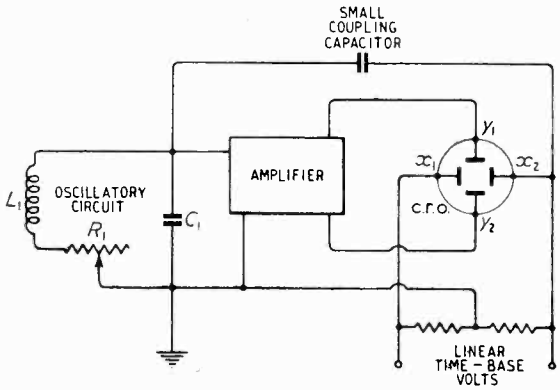

Fig. 1 *Oscillatory circuit excited by linear time base.*

There are a number of ways of producing an oscilloscope trace by the combined effect of oscillations of two different frequencies, which it may be useful to recall.

(i) By formation of Lissajous figures.

(ii) By modulation of the anode voltage while the beam describes a circular trace.

MS. accepted by the Editor, June 1948

www.americanradiohistory.com

(iii) By modulation of the grid voltage, while the beam describes a circular trace.

(iv) By addition of a circular time base to a linear time base.

(v) By addition of another voltage to one or both of the voltages generating a circular time base.

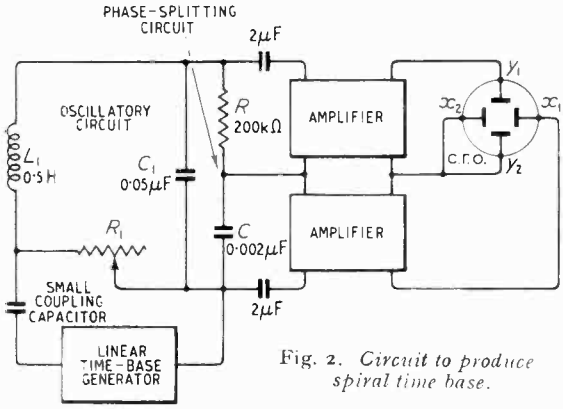

Fig. 2. *Circuit to produce spiral time base.*

(vi) By addition of two circular time bases to produce a circle with re-entrant loops.[1]

(vii) By modulation of the amplitude of a circular time base; usually by control of the grid voltage of amplifiers used to generate the time base.[2]

The types of trace in each case will be different, depending on which frequency is the higher. For example, method (vii) will give a 'cog-wheel' trace if the modulating frequency is much the higher, and a spiral if the modulating frequency is much the lower.

There are various advantages and disadvantages in all these methods, depending on the circumstances; but they all have one feature in common—that the trace on the screen will only be stationary when the frequency ratio is integral.

2. Spiral Trace on the C.R. Screen

It is well known that a circular time base can be formed by a resistance-capacitance phase-splitting circuit in which $R = 1/\omega C$; the voltage on the resistance being applied to one pair of oscilloscope plates, and the voltage on the capacitance to the other pair. A sine wave of voltage is applied to the RC circuit. The author applied, instead, to the RC circuit the damped oscillatory voltage produced by shock-excitation of an oscillatory circuit, as described above.

Two trains of synchronized damped oscillations, at 90° phase displacement, are thus formed, and these combine to give an exponential spiral on the screen. The circuit is shown in Fig. 2. The circuit values given are merely examples: a wide variety of values could, in fact, be chosen.

The spiral trace produced by this circuit remains stationary, whatever the ratio of the two component frequencies, though it changes its form with change of ratio. The circuit can thus be used for inter-relating two oscillations of non-integral frequency ratio; and the spiral trace is, in fact, a time base of constant angular velocity.

In order that several turns of the spiral can be formed on the screen, it is desirable that the natural frequency of the oscillatory circuit shall be several times the excitation frequency. The effect of increasing the excitation frequency is to decrease the number of turns in the spiral before the trace is repeated. The centre turns of the spiral appear to unwrap themselves as the exciting frequency is raised.

In order that the phase-splitting RC circuit shall have a negligible effect on the oscillatory circuit, it is necessary to make the impedance of the RC circuit several times that of the capacitance in the oscillatory circuit.

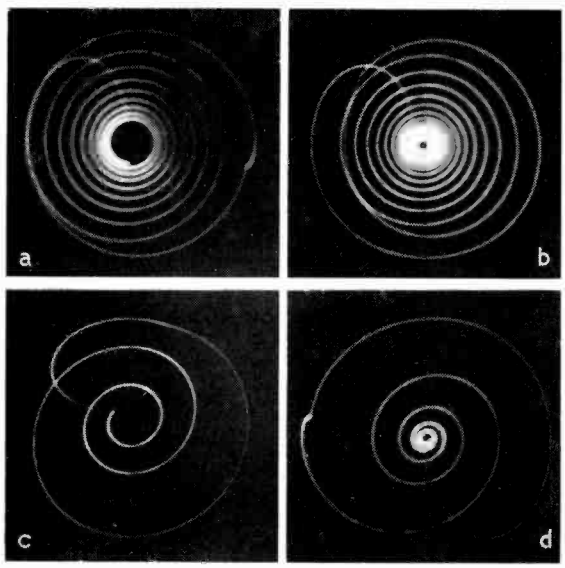

Fig. 3. *Oscillograms of spirals of different frequencies:* (*a*), $Q = 17.1$, $f = 2{,}280$ *c/s*; (*b*), $Q = 16$, $f = 1{,}950$ *c/s*; (*c*), $Q = 13.4$, $f = 1{,}040$ *c/s*; (*d*), $Q = 8$, $f = 780$ *c/s*.

The author has taken photographs of a number of spirals for several values of Q, and varying natural frequency, and with different numbers of turns in the spiral. Four examples, giving the calculated natural frequency and the measured value of Q, are shown in Fig. 3.

www.americanradiohistory.com

3. Generating Vector of Damped Oscillations

A train of damped oscillations, and the exponential spiral which is their geometrical generator, can thus be displayed together on the well-known double-beam oscilloscope. Ordinarily, of course, in this instrument a linear time-base voltage is applied to the common x-plates, and independent voltages to the separate y-plates.

Suppose, however, that the linear time-base voltage is applied to one y-plate, one of the two relatively displaced trains of oscillations to the other y-plate, and the second train of oscillations to the common x-plates. The first and third voltages will give a damped oscillatory train: the second and third an exponential spiral.

The latter, by vertical projection, will be the geometrical generator of the former. The time axis is vertical, but if it is desired to conform with the usual convention it is simple enough to turn the tube through 90°. The arrangement described in this section makes an impressive lecture-demonstration.

4. Acknowledgment

The author is indebted to Messrs. G. W. Harvey and C. J. Hall—formers Honours students in the Department of Electrical Engineering at Bristol University—for carrying out most of the laboratory work described above.

REFERENCES

[1] D. W. Dye. *Proc. phys. Soc.*, Vol. 37, p. 158, and G. H. Rawcliffe, *J. Instn elect. Engrs*, Vo. 89, Pt. III, p. 191.

[2] Radio Res. Station Staff. *J. Instn elect. Engrs*, Vol. 71, p. 82, and O. S. Puckle, *J. Instn elect. Engrs*, Vol. 89, Pt. III, p. 118

APPENDIX

Geometry of the spiral trace, and its relation to Q for the oscillatory circuit.

Taking an arbitrary origin, the two voltages developed by the phase-splitting circuit may be written

$$x = V_0 e^{-\alpha t} \sin \omega t \qquad (1)$$

$$y = V_0 e^{-\alpha t} \cos \omega t \qquad (2)$$

where V_0 is the initial amplitude. The quantities α and ω are defined by the circuit constants L_1, L_1 and C_1 as follows

$$\alpha = \frac{R_1}{2L_1} : \omega = \sqrt{\left(\frac{1}{L_1C_1} - \frac{R_1^2}{4L_1^2}\right)} : \frac{1}{L_1C_1} = (\alpha^2 + \omega^2)$$

(This follows from arguments given in any standard text-book). In polar coordinates, it may be shown from (1) and (2) that

$$r = V_0 e^{-\theta\alpha/\omega} \qquad (3)$$

where $\theta = \omega t$.

This is the equation of a logarithmic spiral, sometimes called an equiangular spiral, because of its property that the tangent at any point is inclined at a constant angle to the corresponding radius vector.

By the ordinary methods of curve rectification we may obtain the relation

$$s = \left(\frac{V_0}{\alpha}\right)(\alpha^2 + \omega^2)^{\frac{1}{2}} [\exp. (-\theta_1\alpha/\omega) - \exp. (-\theta_2\alpha/\omega)] \qquad (4)$$

where s is the length of curve between the two points $(r_1 : \theta_1)$ and $(r_2 : \theta_2)$.

By elimination of θ from (4), by means of (3), we obtain the result

$$s = \left[\frac{(\alpha^2 + \omega^2)^{\frac{1}{2}}}{\alpha}\right](r_1 - r_2)$$

$$= \frac{2}{R_1}\sqrt{\frac{L_1}{C_1}}(r_1 - r_2) \qquad (5)$$

Now Q, the magnification factor for an oscillatory circuit is well known to be given by the expressions

$$Q = \frac{\omega L_1}{R_1} = \sqrt{\frac{L_1}{C_1R_1^2}}$$

It therefore follows that

$$Q = \left[\frac{s}{2(r_2 - r_1)}\right]$$

$$= \left[\frac{\text{Length of spiral between two radii}}{2\ (\text{Difference between these radii})}\right] \qquad (7)$$

Q could, therefore, be deduced from suitable measurements on an observed spiral.

It will be apparent from (3) that the equation of the curve can be written

$$\frac{dr}{d\theta} = -\frac{\alpha}{\omega}r \approx \left[\frac{R_1}{2}\sqrt{\frac{C_1}{L_1}}\right]r = -\frac{r}{2Q} \qquad (8)$$

The equation of an equiangular spiral, in which the tangent makes a constant angle λ with the radius vector, is given by

$$\frac{dr}{d\theta} = r \cot \lambda$$

In this case, therefore, $\cot \lambda = -\frac{1}{2Q}$

or $\tan \lambda = -2Q$

(Since $\tan \lambda$ is negative, λ exceeds 90°, and the spiral converges as θ increases). Q could theoretically be determined from a measurement of λ, though it is obvious that this would be impracticable for most ordinary magnitudes of Q.

www.americanradiohistory.com

NEW BOOKS

Breitband-Richtstrahlantennen mit Anpassvierpolen für Ultrakurzwellen.

By Dr. Rolf Peter. Pp. 88 with 38 illustrations. Verlag Leemann, Zürich. Price 8 fr. (Swiss).

This is a D.Sc. thesis issued by the Institut für Hochfrequenztechnik in Zürich. It is divided into two parts, the first devoted to directive wideband aerials and the second to four-pole matching devices. The first section deals with non-directional cylindrical and conical aerials, their impedance and equivalent circuits. The sizes considered and tested are quite small, varying in height between 25 and 73 mm. The following section deals with the effect of reflectors. The greater part of the book is devoted to filters and four-pole matching devices, especially the use of successive filters in matching different impedances and obtaining a wide pass-band. Details of construction and experimental results are given for a filter with a pass band of $\lambda = 10$ to 20 cm.

The book is well illustrated and numerous references are given. In Table I the column-heading $2r/h$ should be $h/2r$. The statement in the introduction that the electrotechnical system of units is employed seems rather vague. In the bibliography 'meashured impedance' is a good example of phonetic spelling.

G. W. O. H.

Elements of Electromagnetic Waves.

By L. A. Ware. Pp. 203 + x with 69 illustrations. Sir Isaac Pitman and Sons, Ltd., Kingsway, London, W.C.2. Price 20s.

The author is Professor of Electrical Engineering at the State University of Iowa. The book is intended to meet the need for an elementary introduction to the basic ideas of electromagnetic theory; it is essentially mathematical in character and assumes a knowledge of the calculus and fundamental alternating-current theory. The first of the nine chapters is an introduction to vectors and their scalar and vector multiplication; this is followed by a chapter on the application of operators, ∇, divergence, Laplacian and curl. ∇ is called *del*; its alternative name *nabla* is not mentioned.

The third chapter entitled 'Theorems and Laws' deals with m.m.f. and e.m.f., c.g.s. and m.k.s. units, rationalized and unrationalized, scalar and vector potentials, the theorems of Gauss and Stokes, and the laws of Maxwell. Although m.k.s. rationalized units are generally employed, their relation to the other unit systems is set out very clearly. Having thus laid the foundations they are applied in Chapter IV to plane waves, their velocity and energy. Chapter V is devoted to cylindrical and spherical co-ordinates, but the following chapter returns to plane waves and their reflection from conducting and dielectric boundaries. Chapters VII and VIII deal with waveguides, and although the author says that the treatment is not intended to be, in any sense, complete, the subject is discussed very fully with numerous diagrams and examples. The final chapter entitled 'radiation' deals with the radiation from a short wire, the field patterns, radiation resistance, half-wave dipoles and loop antennas.

Every chapter concludes with a number of problems. The author confines his attention to electromagnetic waves, in keeping with the title of the book; the name Ohm does not occur in the index, nor is any reference made to his law. The book is well produced and gives every indication of having been very carefully prepared.

There are a few points, however, to which reference should be made. One is surprised to find conductivities expressed in mho/m^3, the dimensions of which are certainly wrong; conductance is not proportional to volume. Symbols are always a difficulty, but a small ϕ seems a strange choice for both electric potential and magnetic flux. On p. 42 it is stated that B and D do not lend themselves to experimental verification, whereas H and E are physically realizable. This is incorrect so far as B and H are concerned. B lends itself to accurate measurement since the force on a current-carrying conductor depends on B and not on H. Just as one cannot measure stress but must calculate it by dividing a force by an area, so one cannot measure H but must calculate it by dividing ampere-turns by a length (see *Wireless Engineer*, March 1943, p. 105). These are minor details, however, and detract little from the value of the book to those wishing to obtain a thorough grounding in the fundamentals of electromagnetic waves.

G. W. O. H.

Fundamentals of Electric Waves

By H. H. Skilling, Ph.D. Pp. 245 + vii with 86 illustrations. Chapman & Hall, 37, Essex St., London, W.C.2. Price 24s. (in U.K.).

This is the second edition of a book first published in 1942. The author is Professor of Electrical Engineering at Stanford University, U.S.A. New material on waveguides is included and the chapter on antennas has been rewritten. It assumes a knowledge of physics and calculus but no previous knowledge of electromagnetic theory. The rationalized m.k.s. system of units is used but explanatory notes are given in the earlier chapters for the benefit of those who are more familiar with the older systems. Ware in his book on electromagnetic waves says 'the subject of units is a disagreeable one, but it is also an essential one'; Skilling says 'the subject of units and dimensions is a fascinating one.' Everyone to his taste.

Inside the front cover is a table of units and symbols which contains no mention of electromotive force, nor of conductance nor resistivity, although it contains resistance and conductivity. In keeping with this, when considering Ohm's law on p. 70 the formula is $1/R = \gamma \times$ area/length where γ is the conductivity. It would surely be more reasonable to express resistance in terms of resistivity and conductance in terms of conductivity.

The first chapter is devoted to electrostatic field experiments which provide a background for the two following chapters on vector analysis, field theorems, Laplacians and the theorems of Gauss and Stokes. Chapter IV is devoted to the electrostatic field. Everything is illustrated by analogies and little pictures. For the right-handed screw rule we are shown a bottle complete with cork and corkscrew, but for those not familiar with such things there is also a picture of the rotating globe with the 'boreal' vector projecting from the north pole, and simpler still, a picture of a closed right hand with the thumb projecting 'boreal to the fingers.' For ∇ the author uses *nabla* in preference to *del* in accordance with the recommendation of the American I.E.E. and to avoid confusion with *delta*.

The following three chapters deal with the electric current, the magnetic field, including a brief reference to diamagnetism, and 'examples and interpretation.' Maxwell's hypothesis and plane waves are discussed in Chapters VIII and IX, and reflection, skin-effect, standing-wave ratio, etc., in Chapter X. Then follow

www.americanradiohistory.com

chapters on radiation, antennas and waveguides. The author's strange dislike of the sympol ρ for resistivity is evident from a table of earth characteristics, headed 'Resistivity in Metre-ohms $1/\gamma$.' Waveguides are treated very thoroughly with many diagrams showing the various modes. The final chapter is devoted to the ionosphere and its effect on group and phase velocities and on the path of the waves.

Every chapter concludes with a number of problems, and in the preface the reader is urged to work at them systematically. In this connection, following Abraham and Becker, the author refers his readers to James, I, 22 :—'But be ye doers of the word and not hearers only, deceiving your own selves.'

This is a book that can be unreservedly recommended. The mathematics of the subject is not slurred over or sacrificed in any way, but every effort has been made to present it in an interesting manner and to endow the symbols with physical reality. G. W. O. H.

Industrial Electronics and Control

By R. G. KLOEFFLER. Pp. 478 + xiv with 422 illustrations. Chapman & Hall, 37, Essex St., London, W.C.2. Price 33s. (in U.K.). A survey of the theory and applications of electronics in industry. It begins with Bohr's theory of the atom and goes on to treat the basic theory of electron *tubes*, associated circuits and control-component devices. Applications in industrial and commercial fields are included.

Electron Tubes

Vol. I, pp. 475 + x, Vol II, pp. 454 + x. R.C.A. Review, Radio Corporation of America, R.C.A. Laboratories Division, Princeton, New Jersey, U.S.A. Price $3.50 each.

These books contain reprints of papers and summaries of papers by R.C.A. authors which have appeared in 1935–1941 (Vol. I) and 1942–1948 (Vol. II). The papers all deal with some aspect of valves.

Radar Scanners and Radomes

Edited by W. M. Cady, M. B. Karelitz and Louis A. Turner. (Vol. 26, M.I.T. Radiation Laboratory Series). Pp. 491 + xvi, with 232 illustrations. McGraw-Hill Publishing Co., Ltd., Aldwych House, London, W.C. Price 42s. (in U.K.).

CORRESPONDENCE

Letters to the Editor on technical subjects are always welcome. In publishing such communications the Editors do not necessarily endorse any technical or general statements which they may contain.

Relatively-moving Charge and Coil

SIR,—With reference to Professor Howe's Editorial in the April issue, I now find it to be true that the motion of the induced surface charges induces the proper e.m.f. when the coil moves past the stationary charge. The result has many points of interest and merits a summary.

First, it is found that Maxwell's theory does not, in general, justify one's referring the problem to the frame of reference of the coil unless the total magnetic field is the same in each frame of reference. In this case it clearly is not, so the 'transformer' and 'motional' e.m.fs are calculated separately. The transformer e.m.f. is that induced in a stationary path momentarily coincident with the moving coil, while the motional e.m.f. is that due to the motion of the coil through the magnetic field. These two components are directly based on the fundamental laws curl $\mathcal{E} = -B$ and $F_q = q(v \times B)$.

The total magnetic field is then split into two components : a component B_r caused by the motion of the induced surface charges relative to the loop, and a component B' due to the translational motion of the charges with the coil. If E is the e.m.f. induced in a *stationary* loop by a *moving* charge, it is found that :

the transformer e.m.f. due to $B' = e'_t = 0$

the transformer e.m.f. due to $B_r = e_{tr} = E$

the motional e.m.f. due to $B' = e'_m = E$

the motional e.m.f. due to $B_r = e_{mr} = -E$

Thus the total e.m.f. is equal to E, in keeping with the principle of relative motion. The following results also appear :

(a) If B_0 is the magnetic field in the case of the moving charge, stationary coil, then inside the conducting material of the moving loop :

$$B' = B_0$$

and :

$$B' + B_r = B_{av}$$

where B_{av} is the mean value of B_0 over the area of the loop.

(b) If Φ is the linking flux in the moving-charge, stationary-coil case, then the flux of B' through the loop is equal to Φ, although B' is equal to B_0 only within the conductor.

(c) the flux of B_r through the loop is zero.

It thus turns out that one can obtain the correct result, as Professor Howe suggests, from the simple flux-linking law while regarding the coil as moving, and it is satisfying to know that this law is solidly based on Maxwell's equations even in this rather peculiar case. It is not, of course, generally true when there is relative sliding motion between parts of the circuit, such as in Faraday's disc and homopolar generators, a point which Maxwell evidently overlooked in Article 631 of his Treatise.

It is interesting to notice that it is possible to get the correct result in a number of incorrect ways. For instance, one can neglect B_r and obtain e'_t and e'_m, or one can forget everything except e'_m and claim that the flux-cutting law is the proper one whereas the actual motional or flux-cutting e.m.f. is $e'_m + e_{mr} = 0$. Actually the cause of the resultant e.m.f., by a rigorous application of Maxwell's equations, turns out to be, not B', but B_r!

The fact that a consistent result is obtained by this method depends, of course, on the fact that the body acted upon is a *conductor*. The case therefore reminds one of the electric field set up by a moving magnet : Maxwell, unaided by theories of atomic structure, gives the correct result only when the magnet is a *conductor*. If it is accepted that an atom in the magnet becomes electrically polarized by its motion through the magnetic field, as may easily be deduced for a moving current-circuit, then Maxwell gives the correct result whether the magnet is conducting or an insulator, but there is still, I think, trouble in reconciling this theory with the prediction of the Theory of Relativity for the result of

www.americanradiohistory.com

H. A. Wilson's experiment on a magnetic insulator (*Proc. Roy. Soc.*, A, Vol. 89, pp. 99–106, 1913) as I maintained in a previous discussion with Prof. Howe in the *Electrician* some years ago. We may therefore conclude that there is no possible inconsistency between Maxwell's theory and the principle of relative motion so long as the moving bodies are *conductors*, but if they are insulators then complications set in. It is rather difficult to think of an experiment on the induction of an e.m.f. in an insulating loop, but consider the following.

Two insulating discs are arranged concentrically and close together. Each disc has on its periphery a large number of equally spaced conducting segments, which on one disc are positively charged and on the other negatively so that the whole system is electrostatically neutral. If the discs are free to rotate, a moving charge in the vicinity should cause them to rotate in opposite directions, thus simulating an induced current in a circular coil (if the positive disc is clamped this similarity is closer). But what of the case when the discs move past a stationary charge? Induced surface charges can no longer come to the rescue, and it is difficult to see how Maxwell's theory can give a consistent result. It would appear that the Restricted Theory of Relativity, with its contractions of moving bodies and slowing down of clocks, must be used.

Now if Relativity Theory can solve the problem of the discs, we would also expect it to solve the problem of the coil moving past the stationary charge, the only additional theory required being that of electrostatics. That is, the force per unit charge in the moving loop, due to the electrostatic action of the stationary acting charge, would be taken as acting at slightly different instants of time in taking the line-integral around the loop. If this is so, the same method should remove the e.m.f. induced by the surface charges, for otherwise we would obtain twice the proper value. The acting charge would also regain its original function as the *direct* inducer of the e.m.f., and the inductive action of the surface charges would become consistent with the principle of relative motion; that is, independent of any uniform rectilinear motion of the coil.

We should also be able to deduce the e.m.f. in the moving-charge, stationary-coil, case merely by accepting the distortion of the electrostatic field of the moving charge required by Relativity Theory, for the line-integral of this distorted field will not be zero but proportional to $q\,v^2/c^2$, and in the right direction around the loop. If to this we add the e.m.f. induced by the *magnetic* field of the charge, we again obtain twice the required value of e.m.f. Presumably if we take the Relativistic expressions for the fields we must limit our calculation of the e.m.f. to one field or the other, as in the case of the e.m.f. induced in a loop aerial by an electromagnetic wave.

The Relativity treatment of the problem thus requires no electrical theory beyond that of electrostatics, and relativistic electrostatics appears as a substitute for Maxwell's theory, which is consistent in this problem only because the coil is a conductor.

I have been told by various mathematicians that, since the induced e.m.f. is a second-order effect (i.e., proportional to qv^2/c^2), the Theory of Relativity *must* be used in order to get the required result, while others have maintained that consistency of Maxwell's theory with the principle of relative motion is a mathematical necessity. Clearly one at least of these views must be wrong. If the calculation of the e.m.f. outlined above is correct, the former opinion is erroneous, but how does the second group solve the problem of the moving discs with peripheral charges?

The consistency of Maxwell's theory with the principle of relative motion for all cases of practical interest seems to have given rise to the impression that this consistency is *inherent* in the theory. But this conclusion is not supported by the present problems: if inherent consistency exists, it must be independent of the physical properties of the materials taking part in the phenomena. This question has nothing to do with the known invariance of Maxwell's equations to a Lorentz transformation, for the latter is part of the Theory of Relativity and is indeed necessary just because the original theory of Maxwell is *not* inherently relativistic.

Dept. of Defence, Ottawa. E. G. CULLWICK.

Negative Feedback Amplifiers

SIR,—May I reply to Mr. T. S. McLeod's letter in your May issue, commenting on my article published February?

The substance of Mr. McLeod's criticism is that a maximally-flat amplifier is less efficient than one following Bode's design, when judged by the (effective feedback) × (bandwidth) product. The discussion by which Mr. McLeod leads up to this criticism is simply a summary of my article.

Any amplifier which departs from Bode's design must necessarily yield a lower (effective feedback) × (bandwidth) product, for his work consists essentially in determining the conditions which give this product its theoretical limiting value with specified stability margins. Bode's method applies when the useful bandwidth is much less than that defined by the amplification-asymptote of the amplifier and by the required external amplification.

The maximally-flat design is quite different in conception: the level band extends very nearly up to the asymptote. In Mr. McLeod's example with a 1-Mc/s band, the maximally-flat, 2-stage amplifier is flat up to 12.5 Mc/s. The distribution of the effective feedback over this band can be varied by choosing different values for the geometric mean bandwidth (f_o) of the two stages, thus:—

f_o	1	5	10 Mc/s
Feedback			
at low freq.	44	30	24 db
at 1 Mc/s	22	27	24 db
at 5 Mc/s	8	15	18 db
at 10 Mc/s	about zero in all cases		
Bode	50	23	18 db

The last line shows the feedback given by Bode's design for a bandwidth equal to f_o.

The two methods of design are complementary, not competitive. Mr. McLeod requires constant feedback of the maximum possible value over a relatively narrow band: there is, then, no choice but to use Bode's method. If 'a substantially flat response over the maximum possible frequency band' (i.e., as nearly as possible up to the asymptote) is required, the maximally-flat design is needed. In intermediate cases, when the bandwidth required is moderately wide or the necessary feedback is less than the theoretical maximum, either design may frequently be used; the maximally flat design, with its utterly simple circuit, then makes it possible to avoid what Bode himself describes (p. 471) as the 'formidable undertaking' of designing, constructing and testing the networks needed to give his amplifier the prescribed frequency characteristic over a wide band—up to 70 Mc/s in the examples tabulated above.

May I invite Mr. McLeod to quote the page reference to the analysis, which he attributes to Bode, of the three-stage amplifier. The topic does not appear to be discussed in my copy of Bode's book (Van Nostrand, New York, 1945).

Redbourn, Herts. C. F. BROCKELSBY.

www.americanradiohistory.com

WIRELESS PATENTS

A Summary of Recently Accepted Specifications

The following abstracts are prepared, with the permission of the Controller of H.M. Stationery Office, from Specifications obtainable at the Patent Office, 25, Southampton Buildings, London, W.C.2, price 2/- each.

DIRECTIONAL AND NAVIGATIONAL SYSTEMS

608 103.—Super-regenerative circuit, with a diode damping device which is effective only during the reception of pulsed interrogating-signals, but not during the transmission of the subsequent identification signals for radiolocation.

Ferranti Ltd., M. K. Taylor and R. S. Paulden. Application date 15th February, 1946.

608 499.—Loss-less type of transmission line in which the wave moves forward at uniform amplitude and constantly-changing phase, say for feeding a directive aerial-array.

The British Thomson-Houston Co. Ltd. Convention date (U.S.A.) 2nd October, 1944.

608 657.—Radiolocation receiver with a gain-control system which is separately applicable to any selected one of a number of signal-sequences coming under observation.

Sperry Gyroscope Co. Inc. Convention date (U.S.A.) 28th March, 1945.

608 684.—Means for blocking the super-regenerative circuits of an 'identification' equipment, to prevent its spurious triggering by an adjacent radiolocation set.

Ferranti Ltd., J. R. Whitehead and H. Wood. Application date 27th February, 1946.

RECEIVING CIRCUITS AND APPARATUS

(See also under Television)

607 174.—Bridge type of circuit for detecting phase or frequency-modulated signals, wherein the arms consist solely of resistors and capacitors connected alternately in series and in parallel.

J. R. Tillman. Application date 29th January, 1946.

607 465.—Spring-clip device for mounting the screening can of an electron valve, or the like, on the chassis of a radio set.

Kolster-Brandes Ltd. and C. E. Lock. Application date 5th February, 1946.

607 517.—Electrolytic process for producing thin conductive patterns on an insulating surface, e.g., for wiring-up the components of a radio receiver.

H. F. Trewman and W. E. Lord. Application date 7th February, 1946.

607 550.—Receiver for frequency-modulated signals, comprising at least two oscillating valves, one being locked to the carrier-wave for the purpose of reducing interference.

Marconi's W.T. Co. Ltd. (assignees of B. S. Vilkomerson). Convention date (U.S.A.) 4th January, 1945.

608 131.—Super-regenerative receiver in which an auxiliary oscillation is used to control the energy-losses in the main tuned circuit, thereby increasing the effective signal output.

Bendix Aviation Corp. Convention date (U.S.A.) 13th April, 1944.

608 241.—Discriminator circuit for detecting phase or frequency-modulated signals, wherein non-inductive impedances are alone used, and are arranged as a Wien-bridge network.

J. R. Tillman. Application date 14th November, 1945.

608 416.—Wireless set in which the waveband is changed by sliding a carriage, fitted with tuning inductances, to different fixed positions on the main chassis.

S. H. Muffett Ltd. and L. C. Lebar. Application date 22nd February, 1946.

TELEVISION CIRCUITS AND APPARATUS

FOR TRANSMISSION AND RECEPTION

608 193.—Scanning system designed to limit the 'grey' response when transmitting 'line' subjects, of the kind normally used in newspaper work, by photo-telegraphy.

Kemsley Newspapers Ltd. and J. W. Spencer. Application date 18th February, 1946.

608 710.—Noise-suppression circuit for the video-channel of a television receiver, wherein a diode serves to apply negative reaction to the amplifying valve.

E. R. Blackler and Pye Ltd. Application date 28th February, 1946.

TRANSMITTING CIRCUITS AND APPARATUS

(See also under Television)

607 531.—Construction of a flexible section of a wave-guide, comprising a number of closely-spaced metallic discs, each shouldered and notched, and formed with a central aperture. (Addition to 586 458.)

The British Thomson-Houston Co. Ltd. Convention date (U.S.A.) 14th February, 1945.

607 798.—Oscillator valve, with a phase-shifting device in its anode-grid reaction network, say for transmitting frequency-modulated signals.

Philips Lamps Ltd. Convention date (Belgium) 8th February, 1945.

608 738.—Quarter-wave device for coupling a balanced pair of coaxial transmission lines to an unbalanced line or load.

Marconi's W.T. Co., Ltd. (assignees of G. H. Brown). Convention date (U.S.A.) 17th January, 1945.

SIGNALLING SYSTEMS OF DISTINCTIVE TYPE

608 257.—Heterodyne system for generating pulses and for frequency-modulating their pulse-rate in accordance with a signal voltage.

Marconi's W.T. Co. Ltd. (assignees of B. Trevor). Convention date (U.S.A.) 8th January, 1944.

608 261.—Valve circuit for making a continuous record of pulsed signals, modulated in accordance with the instantaneous value of different variables, as used say in the radio transmitters of atmospheric-exploring balloons.

The British Thomson-Houston Co. Ltd. (communicated by the General Electric Co.). Application date 17th January, 1946.

608 467.—Oscillation-generator with a tuned-anode circuit for detecting time or phase-modulated pulsed signals.

Standard Telephones and Cables Ltd., P. K. Chatterjea and J. K. Beney. Application date 25th February, 1946.

www.americanradiohistory.com